MICRO SWITCH
FREEPORT, ILLINOIS, U.S.A.
A DIVISION OF HONEYWELL
FED. MFG. CODE 91929

SWITCH-ENCLOSED

CATALOG LISTING
3EN1-6

MILITARY STDS. PART NO.
MS 24331-3

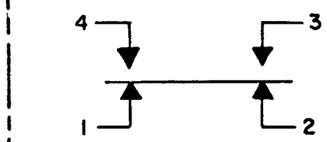

CIRCUIT DIAGRAM

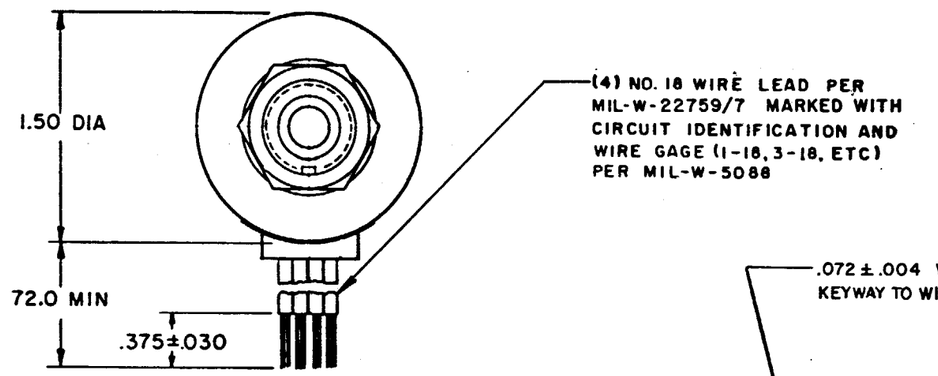

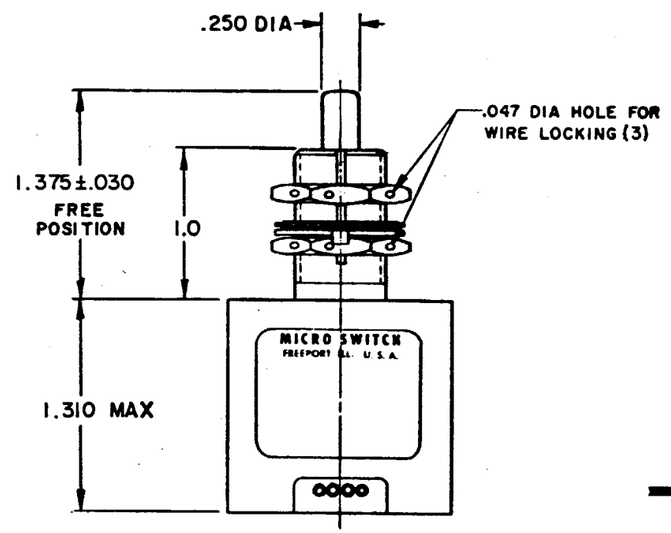

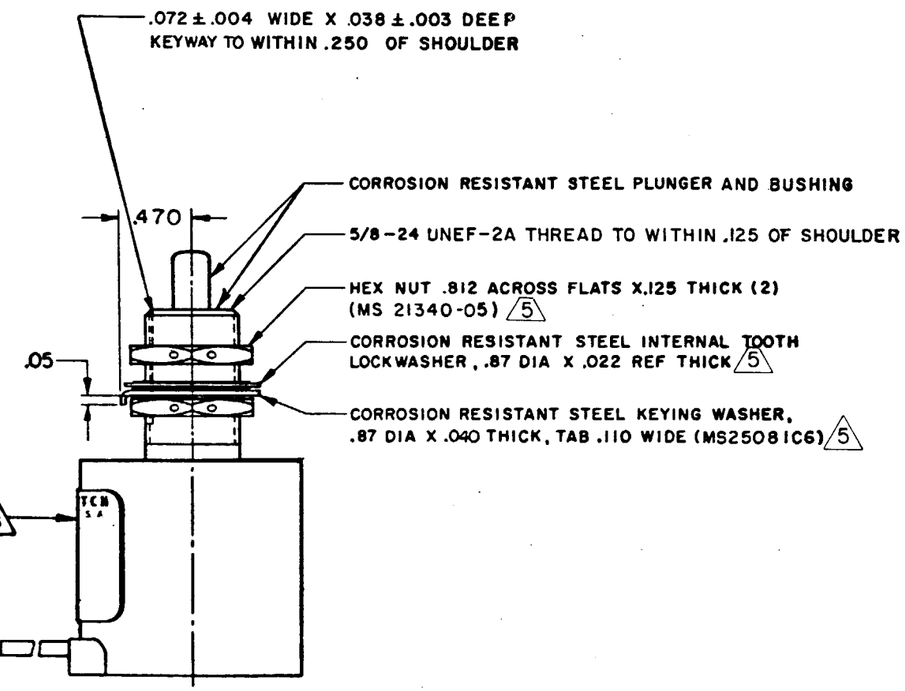

NOTES
1 - CORROSION RESISTANT STEEL ENCLOSURE
2 - SWITCH SEALED PER MIL-S-8805 SYMBOL 4
3 CIRCUIT DIAGRAM, CATALOG LISTING, AND MIL STD NO. MS 24331-3 ARE SHOWN ON NAMEPLATE
4 APPLICATION INFORMATION ONLY
5 HARDWARE MAY BE PACKAGED UNASSEMBLED PER MIL- S-8805

THIS DRAWING COVERS A PROPRIETARY ITEM AND IS THE PROPERTY OF MICRO SWITCH, A DIVISION OF HONEYWELL. THIS DRAWING IS NOT TO BE COPIED OR USED WITHOUT THE APPROVAL OF MICRO SWITCH.

THIRD ANGLE PROJECTION

SCALE FULL

DO NOT SCALE PRINT

TOLERANCES
APPLY TO DESIGN UNITS. CONVERSIONS ARE ONLY FOR REFERENCE. UNLESS NOTED, TOLERANCES ARE ±

	DIM. mm	TOL. mm/in	DIM. in	TOL. mm/in
NO PLACES	X	1/.04		
ONE PLACE	X.X	0.4/.018	X.X	0.8/.03
TWO PLACES	X.XX	0.15/.006	X.XX	0.38/.015
THREE PLACES			X.XXX	0.13/.005
ANGLES				

DESIGN UNITS SI METRIC ☐ US CUSTOMARY ■

RAW MATERIAL-COMMERCIAL STANDARD
MICRO SWITCH STANDARDS APPLY
DIMENSIONS ARE TO BE MET BEFORE PROTECTIVE COATINGS ARE APPLIED

WEIGHT .62 LB

CHARACTERISTICS

OPERATING FORCE	6-12 LB
FULL OVERTRAVEL FORCE	30 LB MAX
RELEASE FORCE	5 LB MIN
PRETRAVEL	.060 MAX
DIFFERENTIAL TRAVEL	.035 MAX
OVERTRAVEL	.250 MIN

ELECTRICAL DATA

CONTACT ARRANGEMENT
(SEE CIRCUIT DIAGRAM)

LOAD	28 VDC SEA LEVEL	28 VDC 50,000 FT.
RES	15	15
IND	10	10
MOTOR	5	5 4

REVISIONS

A	NEW DWG C044635	T R F 17 NOV 78
B	C046777	J A P 12 NOV 79
C	C073915	S A V 30 OCT 92
D	CO 75787-C	DAW 16 MAY 94

3EN1-6 | M | DRAWING NUMBER | ISSUE 2 | REPLACES | RELEASE NO. SR-4782 | CHECK | CHECK | 21 NOV 78 | CLH | CHECK | 17 NOV 78 | DRAWN T R F | FO-52851-A