REV.	DATE	DESCRIPTION
A	08/31/04	UPDATE DRAWING FORMAT

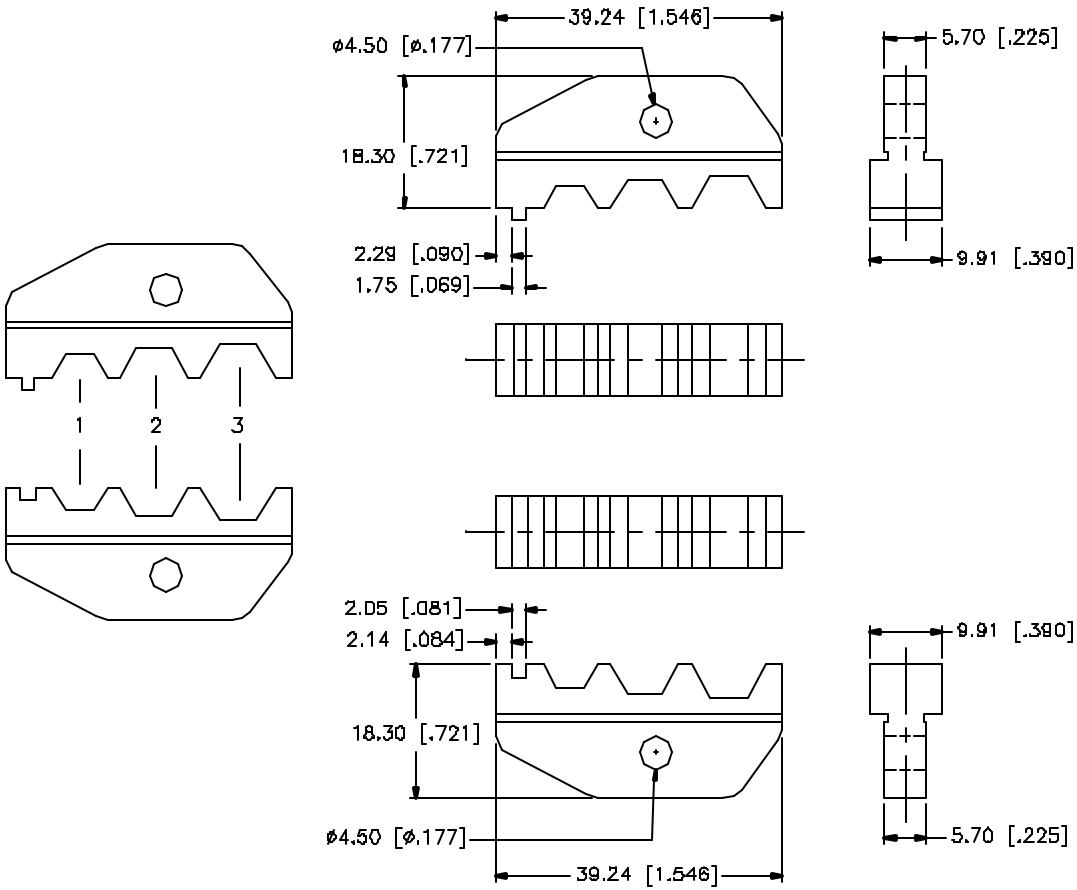

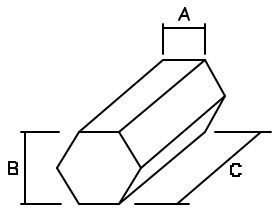

	A	B	C
1	3.73 [.147]	6.46 [.255]	9.91 [.390]
2	4.69 [.185]	8.13 [.320]	9.91 [.390]
3	5.13 [.202]	8.88 [.350]	9.91 [.390]
4			

	DESCRIPTION	MATERIAL	FINISH	QTY
8				
7				
6				
5				
4				
3				
2				
1	DIE BODY	CAST STEEL	BLK. OXIDE	

UNLESS OTHERWISE SPECIFIED DIMENSIONS ARE IN MILLIMETERS. DIMENSIONS IN [ ] ARE IN INCHES AND FOR CUSTOMER REFERENCE ONLY.

UNLESS OTHERWISE SPECIFIED TOLERANCES FOR MILLIMETERS ARE:
0.5 – 6mm ± 0.20mm
6 – 30mm ± 0.40mm
30 – 120mm ± 0.50mm

UNLESS OTHERWISE SPECIFIED TOLERANCES FOR INCHES ARE:
.020 – .315 = ± 0.007"
.315 – 1.180 = ± 0.015"
1.180 – 4.724 = ± 0.020"

DO NOT SCALE DRAWING

APPROVALS		DATE
DRAWN	G.R.S.	08/31/04
CHECKED		
ISSUED		
SHEET	1 OF 1	

CAD FILE C:/MISC/47-20026.DWG

Amphenol Connex

PART DESCRIPTION: CRIMP DIE SET

PART NO.: 47-20026

DWG. NO.: 47-20026.DWG | REV. A | SIZE A | SCALE NA