REV.	DATE	DESCRIPTION
A	08/31/04	UPDATE DRAWING FORMAT

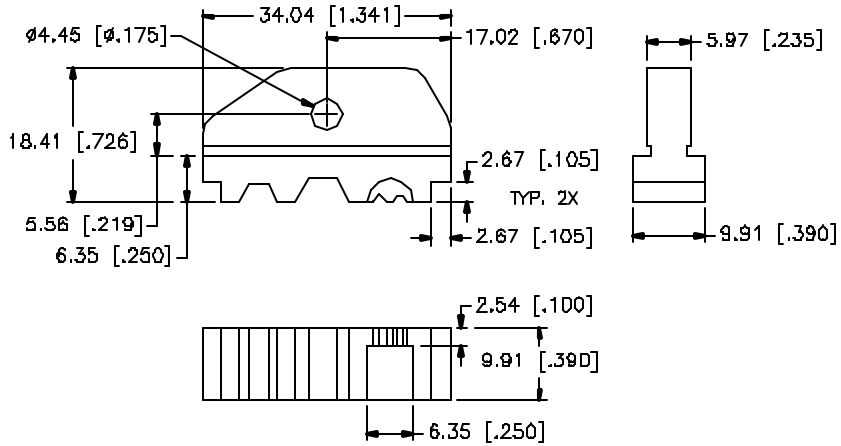

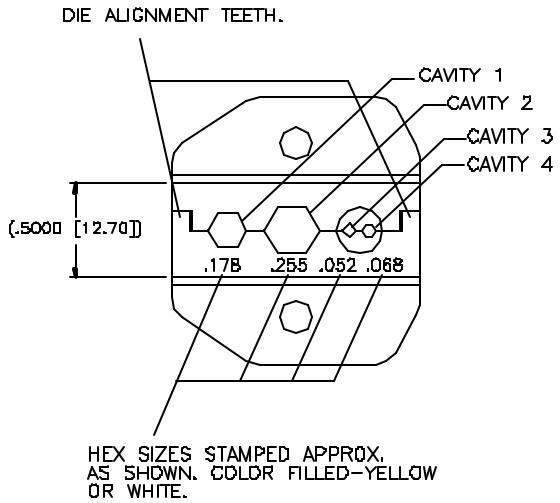

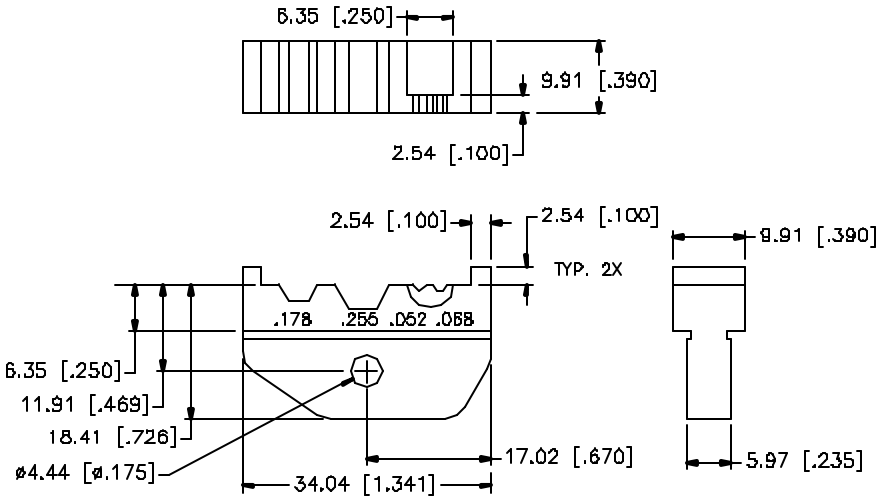

CAVITY NO.	DIM. ACROSS FLATS	GROOVE ACCOMMODATIONS
1	.178 ±.003 HEX	RG 174 (3 PC)
2	.255 ±.003 HEX	RG 59, RG 62 PLENUM 59 & 62
3	.052 ±.003 DIAMOND	CENTER CONTACT
4	.068 ±.003 HEX	CENTER CONTACT

	DESCRIPTION	MATERIAL	FINISH	QTY
8				
7				
6				
5				
4				
3				
2				
1	DIE BODY	CAST STEEL	BLK. OXIDE	

UNLESS OTHERWISE SPECIFIED DIMENSIONS ARE IN MILLIMETERS. DIMENSIONS IN [ ] ARE IN INCHES AND FOR CUSTOMER REFERENCE ONLY.

UNLESS OTHERWISE SPECIFIED TOLERANCES FOR MILLIMETERS ARE:
0.5 – 6mm ± 0.20mm
6 – 30mm ± 0.40mm
30 – 120mm ± 0.50mm

UNLESS OTHERWISE SPECIFIED TOLERANCES FOR INCHES ARE:
.020 – .315 = ± 0.007"
.315 – 1.180 = ± 0.015"
1.180 – 4.724 = ± 0.020"

DO NOT SCALE DRAWING

APPROVALS		DATE
DRAWN	G.R.S.	08/31/04
CHECKED		
ISSUED		
SHEET	1 OF 1	

CAD FILE C:/MISC/47-20028.DWG

Amphenol Connex

PART DESCRIPTION: CRIMP DIE SET

PART NO. 47-20028

DWG. NO. 47-20028.DWG | REV. A | SIZE A | SCALE NA