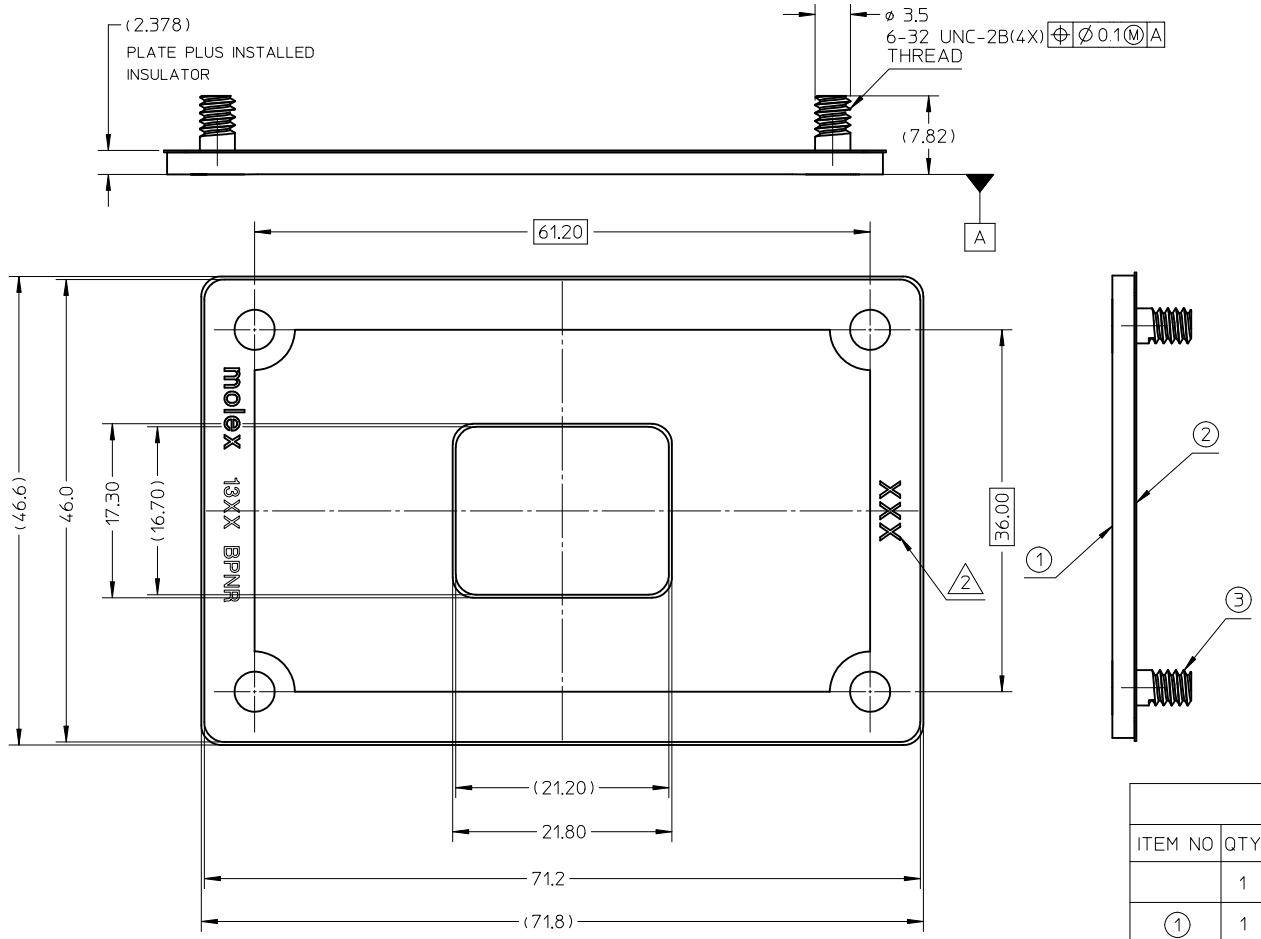

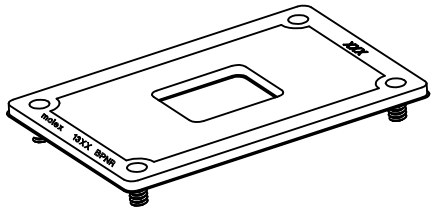

NOTES:

1. MATE WITH LGA13XX ILM ASSEMBLY, DETAIL REFER TO SD-47593-900
2. DATE CODE
3. THE PARTS 475938000 COMPLIANT TO RoHS DIRECTIVE 2002/95/EC AND ELV 2000/53/EC

BILL OF MATERIAL

ITEM NO	QTY	DESCRIPTION	MATERIAL
	1	BACK PLATE ASSY FOR DESKTOP	
1	1	BACK PLATE	STEEL WITH NICKEL PLATING
2	1	BACK PLATE INSULATOR	FORMEX GK-5BK
3	4	BACK PLATE SCREW	STEEL WITH NICKEL PLATING

ENTER DESCRIPTION
EC NO: SH2011-0324 2011/05/03
DRWN:JZHANG11
CHKD:
APPR:AYIN 2011/05/19
REV DESCRIPTION

QUALITY SYMBOLS
F_A=0
F_C=0
F_P=0

GENERAL TOLERANCES (UNLESS SPECIFIED)

	mm	INCH
4 PLACES	± ---	± ---
3 PLACES	± ---	± ---
2 PLACES	± 0.2	± ---
1 PLACE	± 0.3	± ---
ANGULAR ± 1 °		

DRAFT WHERE APPLICABLE MUST REMAIN WITHIN DIMENSIONS

DIMENSION STYLE: MM ONLY
SCALE: 1:1
DESIGN UNITS: METRIC
THIRD ANGLE PROJECTION

DRAWN BY: YQSUN DATE: 2008/10/13
CHECKED BY: JKACHLIC DATE: 2008/10/13
APPROVED BY: AYIN DATE: 2010/10/22

TITLE: 13XX ILM BACK PLATE FOR DESKTOP APPLICATION

molex MOLEX INCORPORATED

MATERIAL NO. 47593-8000
DOCUMENT NO. SD-47593-800
SHEET NO. 1 OF 1
SIZE A3

THIS DRAWING CONTAINS INFORMATION THAT IS PROPRIETARY TO MOLEX INCORPORATED AND SHOULD NOT BE USED WITHOUT WRITTEN PERMISSION