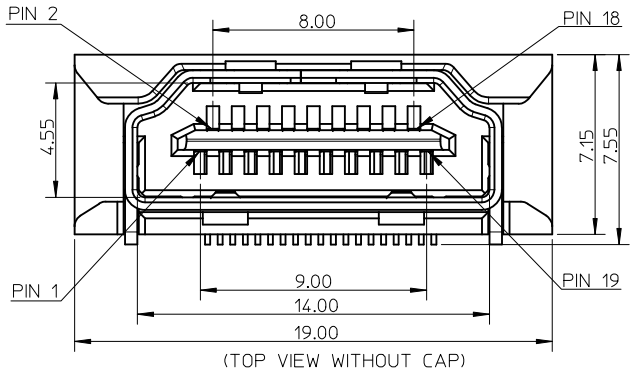

(TOP VIEW WITHOUT CAP)

NOTES:

1. MATERIAL:
   HOUSING/COVER: HIGH TEMPERATURE THERMAL PLASTIC. COLOR: BLACK.
   SHELL: COPPER ALLOY.
   TERMINAL: COPPER ALLOY.
2. PLATING:
   TERMINAL:
      CONTACT AREA: GOLD FLASH.
      SOLDER AREA: 1 MICROMETER MIN. TIN-BISMUTH ALLOY PLATED.
      UNDER PLATE: 1.27 MICROMETER MIN. NICKEL.
   SHELL: 3 MICROMETER MIN. MATTE TIN PLATING OVERALL.
3. COPLANARITY: 0.10mm MAX .
4. DATE CODE: YY: YEAR; MM: MONTH; DD: DAY; T: TIME, A=DAYTIME, B=NIGHT; N: LINE, 1=LINE 1, 2=LINE 2...
5. PRODUCT SPECIFICATION REFER TO PS-47632-001.
6. PACKAGE SPECIFICATION REFER TO PK-47632-003.
7. PRODUCT COMPLIANT TO RoHS DIRECTIVE 2002/95/EC AND ELV DIRECTIVE 2000/53/EC.

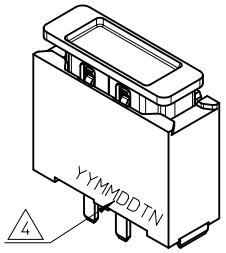

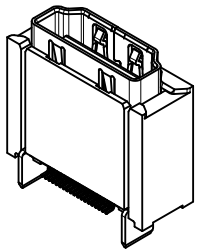

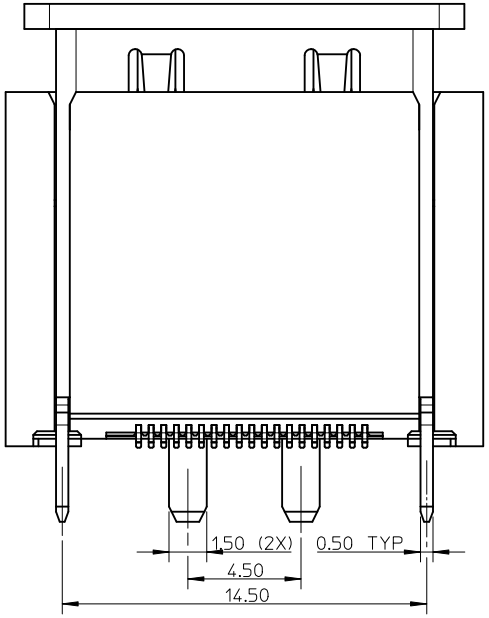

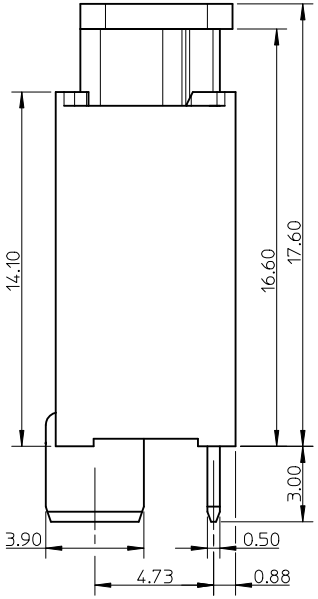

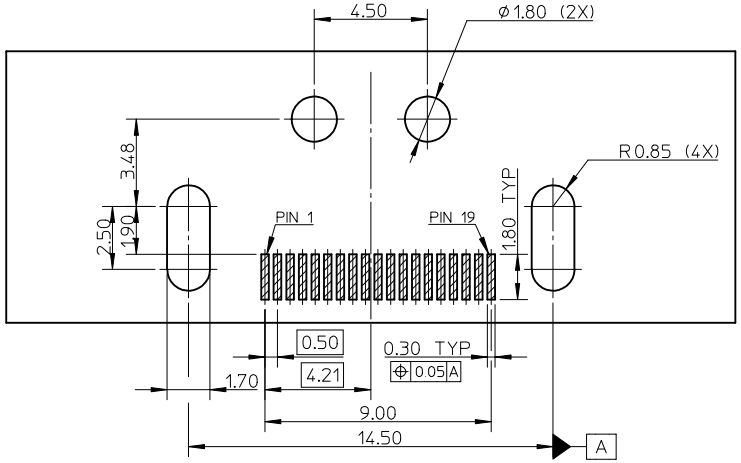

RECOMMENDED PCB LAYOUT (CONNECTOR SIDE)

THICKNESS=1.60mm, GENERAL TOLERANCE: ±0.05

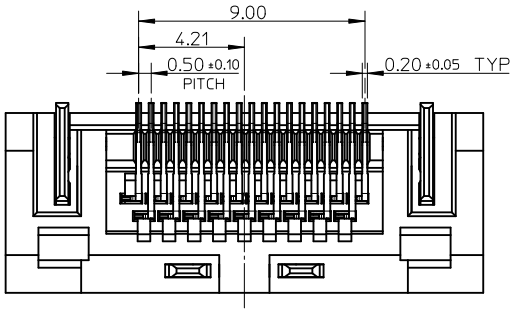

REVISED			
EC NO: SH2011-0321	2011/05/05		
DRWN:XOZHANG	2011/07/04		
CH'KD:GLLI	2011/07/05		
APPR:XJSONG			
B		REV	DESCRIPTION

QUALITY SYMBOLS: $\sqrt{F_A}$=0, $\sqrt{F_C}$=0, $\sqrt{F_P}$=0

GENERAL TOLERANCES (UNLESS SPECIFIED)	mm	INCH
4 PLACES	± ---	± ---
3 PLACES	± ---	± ---
2 PLACES	± 0.20	± ---
1 PLACE	± 0.30	± ---
ANGULAR ± 1 °		

DRAFT WHERE APPLICABLE MUST REMAIN WITHIN DIMENSIONS

DIMENSION STYLE: MM ONLY	SCALE: 5:1	DESIGN UNITS: METRIC	THIRD ANGLE PROJECTION
DRAWN BY: CWTANG	DATE: 2009/01/05	TITLE: HDMI RECEPTACLE VERTICAL SMT TYPE WITHOUT FLANGE	
CHECKED BY: XJSONG	DATE: 2009/01/05		
APPROVED BY: XJSONG	DATE: 2010/01/26	MOLEX INCORPORATED	
MATERIAL NO.: 47632-3000		DOCUMENT NO.: SD-47632-300	SHEET NO.: 1 OF 1
SIZE: A3		THIS DRAWING CONTAINS INFORMATION THAT IS PROPRIETARY TO MOLEX INCORPORATED AND SHOULD NOT BE USED WITHOUT WRITTEN PERMISSION	