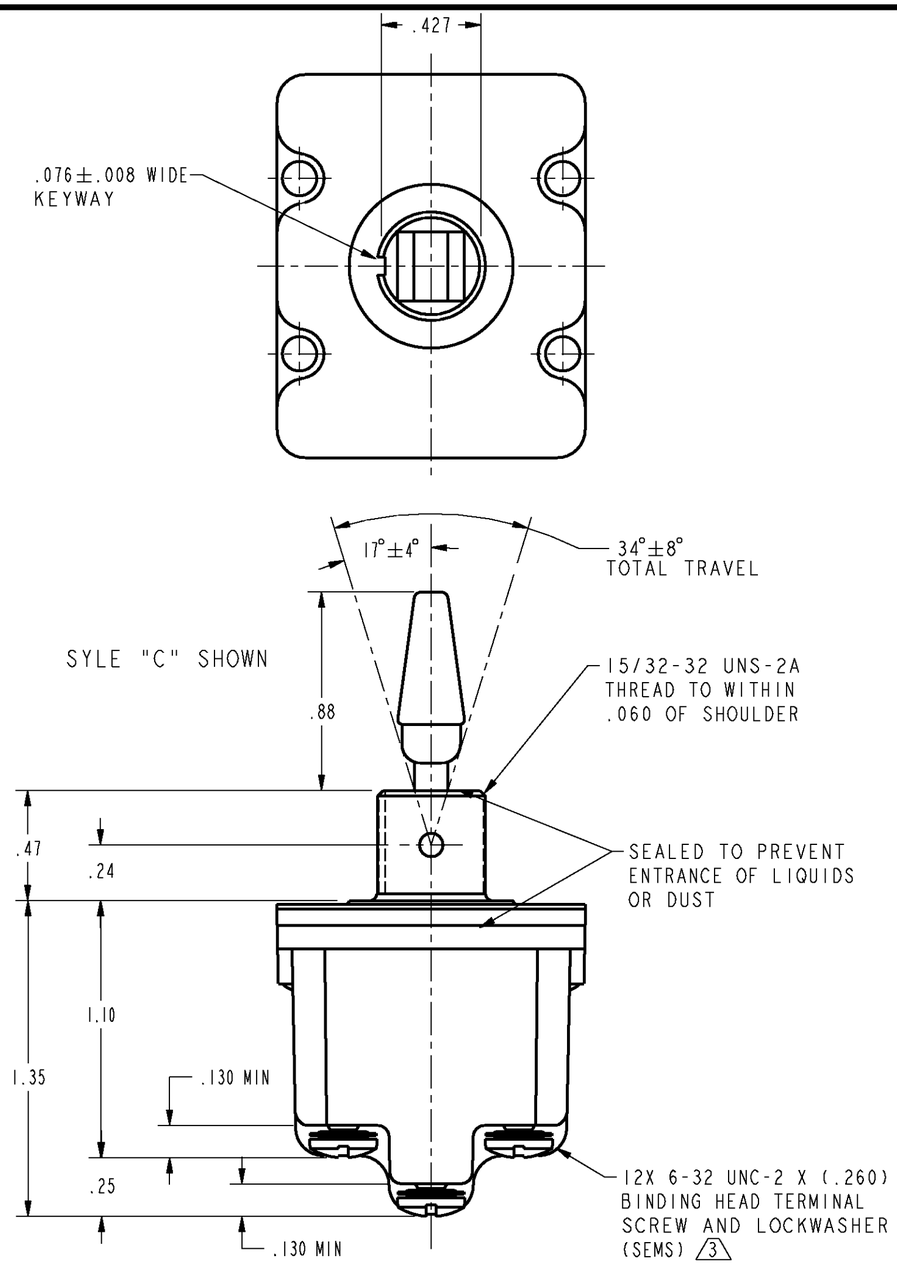

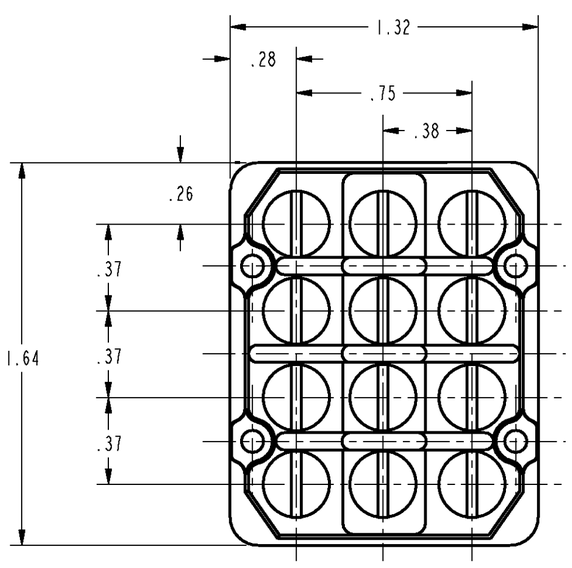

CATALOG LISTING 5	CIRCUIT MADE WITH TOGGLE LEVER IN 4: KEYWAY SIDE (1-2, 4-5, 7-8, 10-11)	CENTER (1-2, 4-5, 7-8, 10-11)	OPPOSITE KEYWAY (2-3, 5-6, 8-9, 11-12)	ELECTRICAL DATA
4NT319-1-	ON	OFF	ON	L191 15A 125, 250, 277 VAC 1/2HP 125 VAC 1HP 250, 277 VAC 5A 125 VAC "L"
4NT319-2-	OFF	NONE	ON	
4NT319-3-	ON	NONE	ON	
4NT319-21-	NONE	OFF	ON	
4NT319-31-	NONE	ON	ON	
4NT319-4-	MOM OFF	NONE	ON	L192 10A 125, 250, 277 VAC 1/4HP 125 VAC, 1/2HP 250, 277 VAC 3A 125 VAC "L"
4NT319-5-	MOM ON	OFF	ON	
4NT319-6-	MOM ON	NONE	OFF	
4NT319-7-	MOM ON	OFF	MOM ON	
4NT319-8-	MOM ON	NONE	ON	
4NT319-51-	NONE	ON	MOM ON	
4NT319-61-	MOM ON	OFF	NONE	

4NT319 SERIES CHART 1

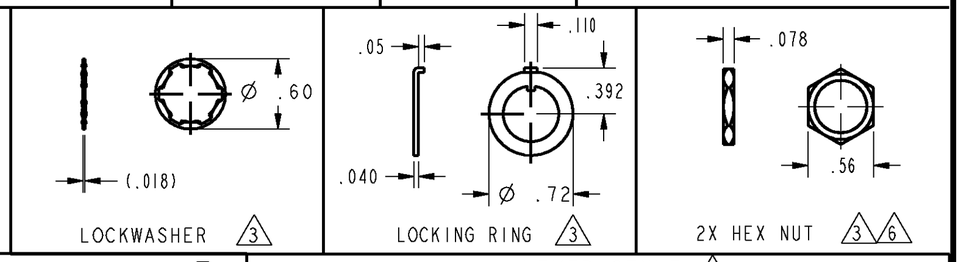

LEVER COLOR CODE 5	
COLOR IDENT	COLOR
01	WHITE
02	BLACK
03	BLUE
04	RED
05	GREEN
06	ORANGE
07	GRAY
08	YELLOW

LEVER STYLE 5

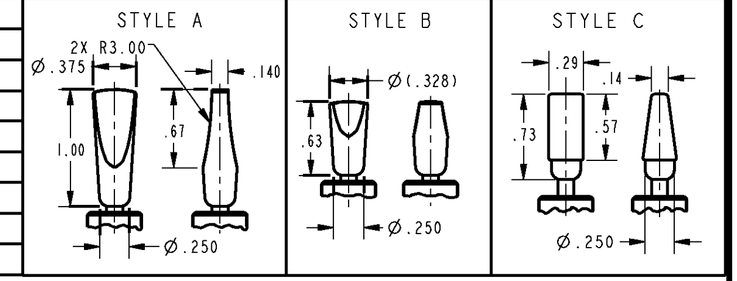

NOTES
1 - SWITCHES ARE CAPABLE OF WITHSTANDING A TEMPERATURE OF 160°F CONTINUOUSLY AT FULL RATED LOAD
2 - MICRO SWITCH CATALOG LISTING MARKED ON SIDE OF SWITCH
3 FURNISHED UNASSEMBLED
4 APPLIES ONLY TO "ON" AND "MOM ON" POSITIONS
5 SUFFIX MUST BE ADDED FOR SEDIRED LEVER STYLE AND COLOR (EXAMPLE: 4NT319-1-C08)
6 ONE HEX NUT HAS BLACK FINISH

THIRD ANGLE PROJECTION

SCALE 2 : 1

DO NOT SCALE PRINT

UNLESS OTHERWISE SPECIFIED TOLERANCES ARE

ONE PLACE	(.0)	±.030
TWO PLACES	(.00)	±.015
THREE PLACES	(.000)	±.005
ANGLES		±

WEIGHT

THIS DRAWING COVERS A PROPRIETARY ITEM AND IS THE PROPERTY OF MICRO SWITCH. A DIVISION OF HONEYWELL. THIS DRAWING IS NOT TO BE COPIED OR USED WITHOUT THE APPROVAL OF MICRO SWITCH.

MICROSWITCH a Honeywell Division
FED. MFG. CODE 91929

SWITCH - TOGGLE

CATALOG LISTING
4NT319 SERIES CHART 1

ANSI Y14.5M-1982 APPLIES

4NT319 SERIES CHART 1
PAGE 1 OF 1
RELEASE NO. PR-22515
REPLACES
DRAWING NUMBER
ISSUE 3
CHECK
REVISIONS
A CO-94362 LJK 22 NOV 99
CHECK 22 NOV 99
JAF
CHECK 22 NOV 99
PTC/CAD 2D
DRAWN LJK 22 NOV 99