**MICRO SWITCH**
FREEPORT ILLINOIS U S A
A DIVISION OF HONEYWELL
FED. MFG. CODE 91929

# SWITCH-TOGGLE

CATALOG LISTING
## 4TL11-50 SERIES
## CHART 1

THIS DRAWING COVERS A PROPRIETARY ITEM AND IS THE PROPERTY OF MICRO SWITCH. A DIVISION OF HONEYWELL. THIS DRAWING IS NOT TO BE COPIED OR USED WITHOUT THE APPROVAL OF MICRO SWITCH.

| | CATALOG LISTING | AVAILABLE LOCKING COMBINATIONS FOR CONFIGURATION SEE LETTERED DETAILS | STYLE NUMBER | CURRENT CAPACITY (AMPS) RESISTIVE LOAD DC VOLTS 28 | 125 | 250 | AC VOLTS 125 | 250 | LAMP LOAD 28 VDC | 125 VAC | INDUCTIVE LOAD 28 VDC | 125 VAC |
|---|---|---|---|---|---|---|---|---|---|---|---|---|
| | 4TL11-50 | NONE | 1 | 18 | .75 | .5 | 11 | 6 | 4 | 2 | 10 | 8 |
| | 4TL11-50 △6 | E, F, K, L, M, N | 2 | | | | | | | | | |

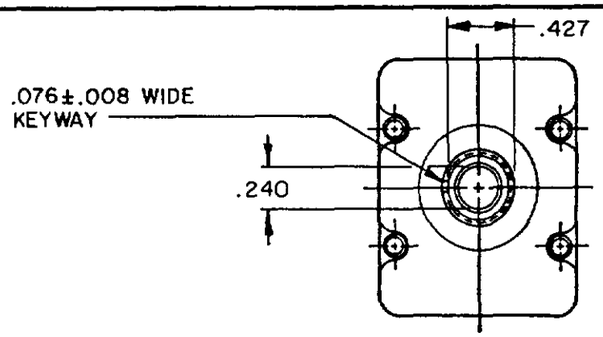


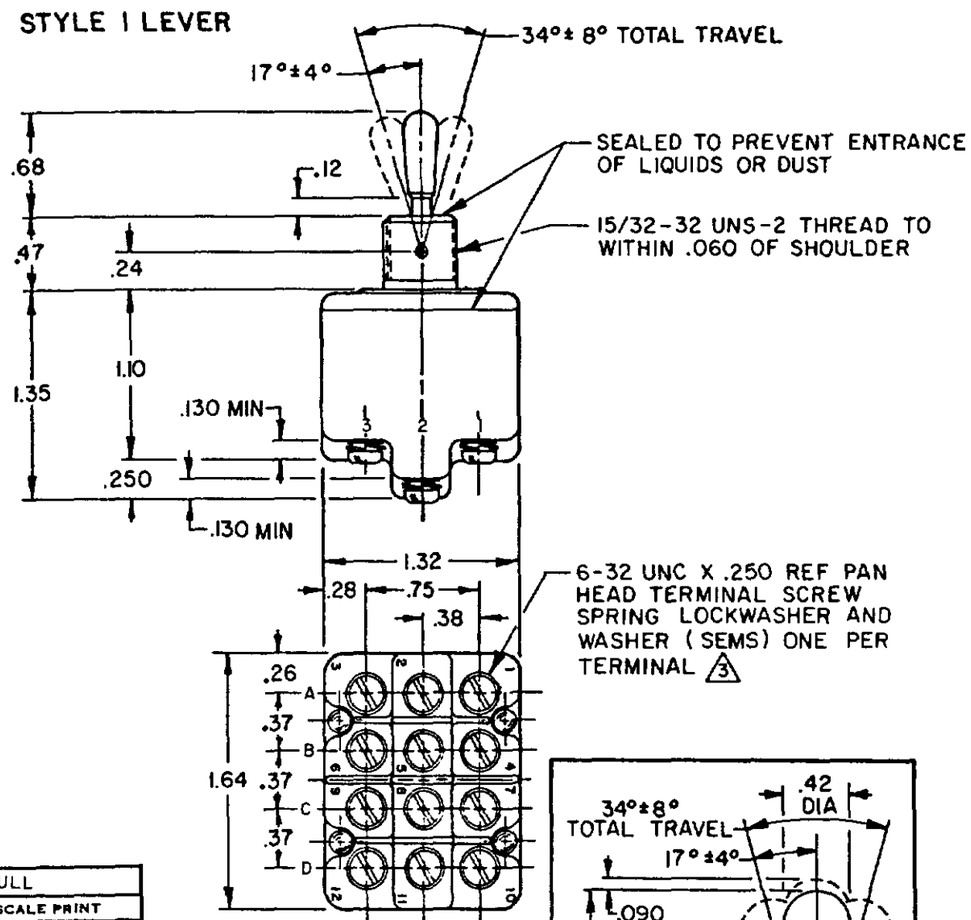


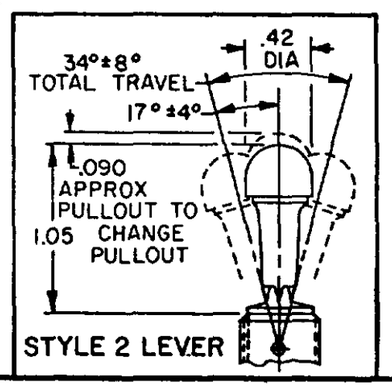


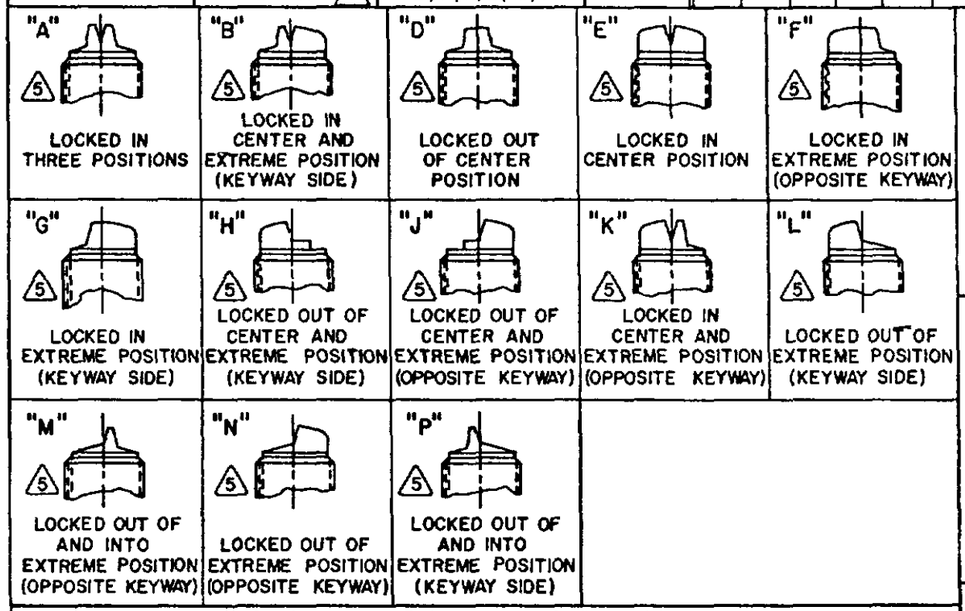


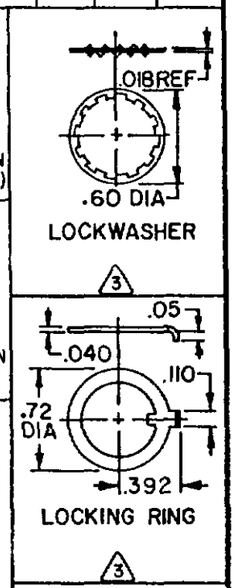


CIRCUIT MADE WITH TOGGLE LEVER IN

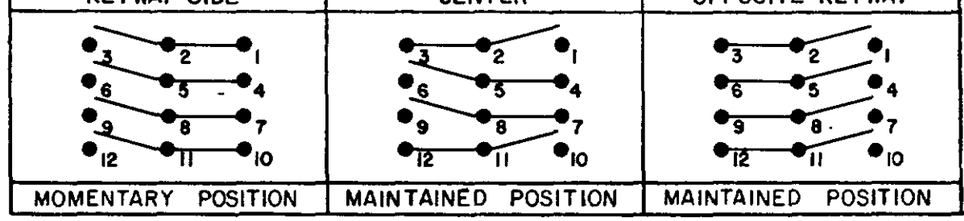


NOTES
1 - SWITCHES ARE CAPABLE OF WITHSTANDING A TEMPERATURE OF 160°F CONTINUOUSLY AT FULL RATED LOAD
2 - MICRO SWITCH CATALOG LISTING, TERMINAL, POLE AND CIRCUIT DESIGNATION MARKED ON SIDE OF SWITCH
△3 FURNISHED UNASSEMBLED
4 - FOR TERMINAL COVER SEE MICRO SWITCH CAT. LIST. 5PA9
△5 KEYWAY SHOWN ON LEFT SIDE
△6 SUFFIX LETTER MUST BE ADDED FOR DESIRED TYPE OF TOGGLE LOCKING. SEE CHART FOR AVAILABLE LOCKING COMBINATIONS

SCALE FULL
DO NOT SCALE PRINT
UNLESS OTHERWISE NOTED
DIMENSIONS ARE IN INCHES
TOLERANCES ARE:
ONE PLACE (.0) ±.030
TWO PLACE (.00) ±.015
THREE PLACE (.000) ±.005
ANGLES ±1°
WEIGHT .20 LBS MAX

CATALOG LISTING 4TL11-50 SERIES CHART 1 PAGE 1 OF 1
ISSUE M 2
REPLACES 4TL11-50 SERIES
RELEASE NO CO-78497
REVISIONS
A CO-8150 J A K 19 JUN 95
CHECK
CHECK KAG 13 JUL 94
CHECK
DRAWN SAV 11 JUL 94
FORMTEK