MICRO SWITCH
FREEPORT ILLINOIS U S A
A DIVISION OF HONEYWELL
FED. MFG. CODE 81929

SWITCH-TOGGLE

CATALOG LISTING
4TL11-76 SERIES
CHART 1

THIS DRAWING COVERS A PROPRIETARY ITEM AND IS THE PROPERTY OF MICRO SWITCH, A DIVISION OF HONEYWELL. THIS DRAWING IS NOT TO BE COPIED OR USED WITHOUT THE APPROVAL OF MICRO SWITCH.

CATALOG LISTING	AVAILABLE LOCKING COMBINATIONS FOR CONFIGURATION SEE LETTERED DETAILS	STYLE NUMBER	CURRENT CAPACITY (AMPS) RESISTIVE LOAD DC VOLTS 28	RESISTIVE LOAD DC VOLTS 125	RESISTIVE LOAD DC VOLTS 250	RESISTIVE LOAD AC VOLTS 125	RESISTIVE LOAD AC VOLTS 250	LAMP LOAD 28 VDC	LAMP LOAD 125 VAC	INDUCTIVE LOAD 28 VDC	INDUCTIVE LOAD 125 VAC
4TL11-76	NONE	1	20	75	5	15	6	7	4	12	15
4TL11-76 (6)	E,L,N	2									

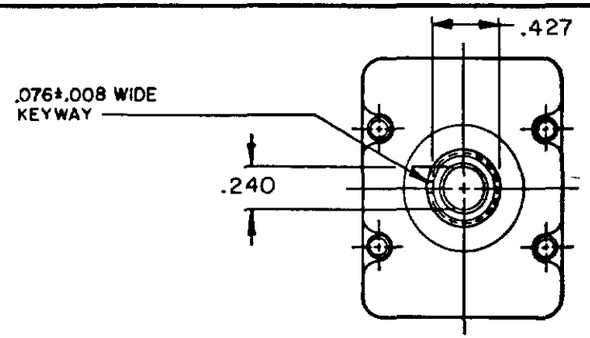

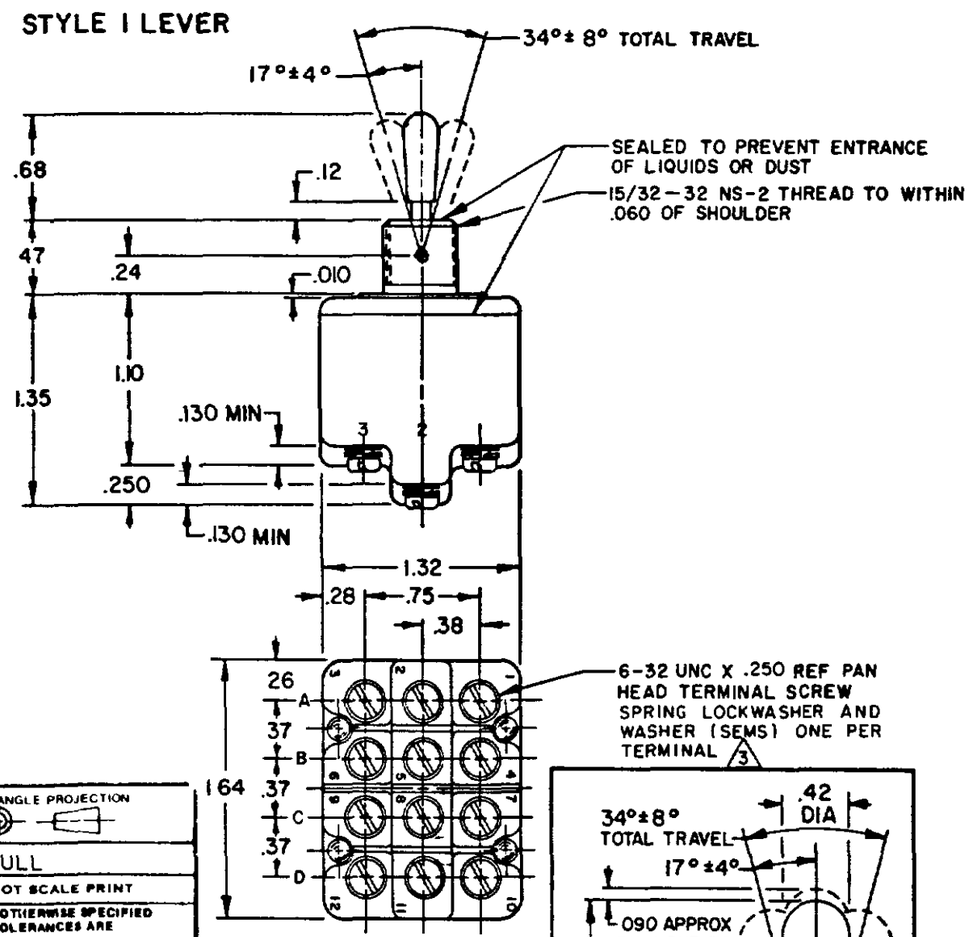

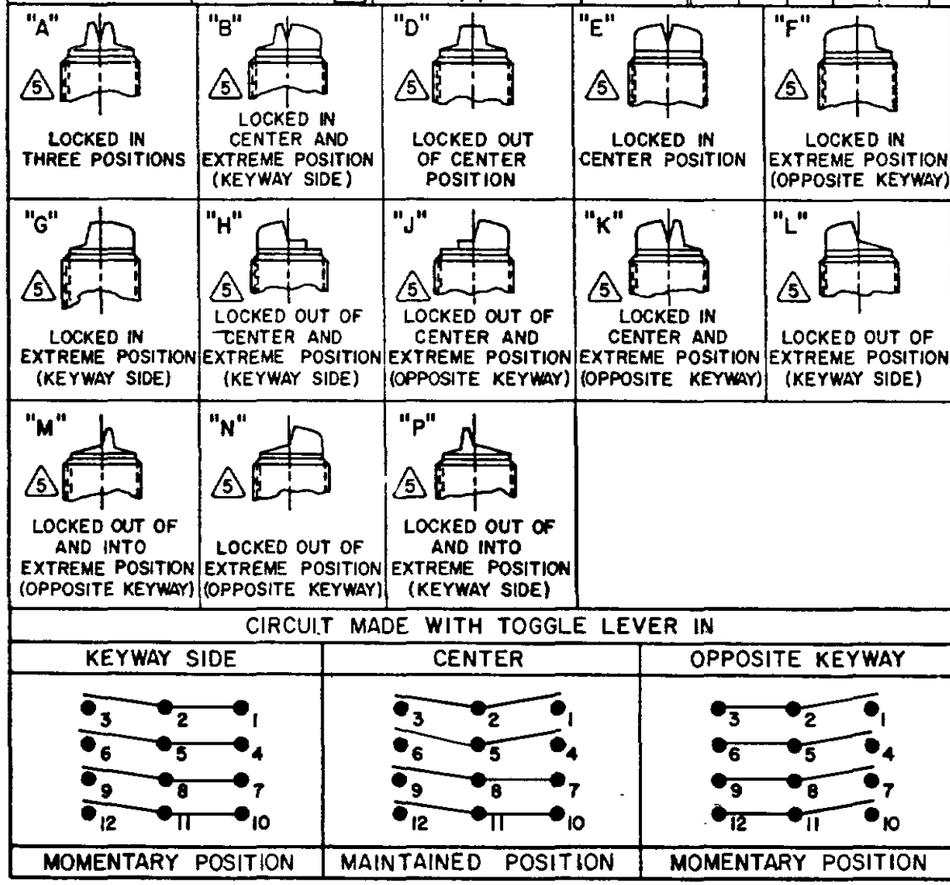

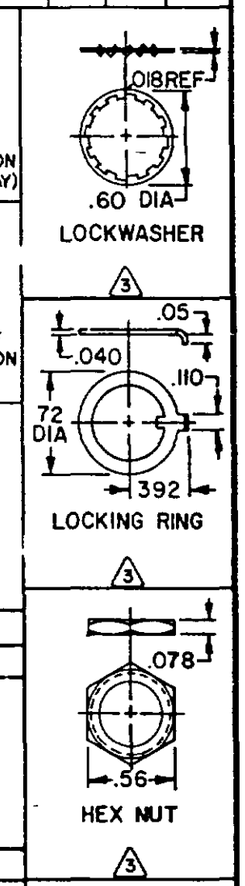

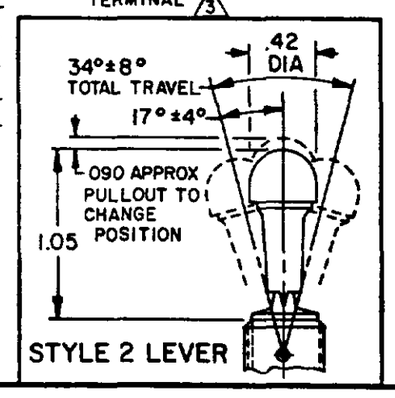

NOTES
1 - SWITCHES ARE CAPABLE OF WITHSTANDING A TEMPERATURE OF 160°F CONTINUOUSLY AT FULL RATED LOAD
2 - CIRCUIT DESIGNATION AND MICRO SWITCH CATALOG LISTING MARKED ON SIDE OF SWITCH
(3) FURNISHED UNASSEMBLED
4 - FOR TERMINAL COVER SEE MICRO SWITCH CAT. LIST. 5PA9
(5) KEYWAY SHOWN ON LEFT SIDE
(6) SUFFIX LETTER MUST BE ADDED FOR DESIRED TYPE OF TOGGLE LOCKING. SEE CHART FOR AVAILABLE LOCKING COMBINATIONS

THIRD ANGLE PROJECTION
SCALE FULL
DO NOT SCALE PRINT
UNLESS OTHERWISE SPECIFIED TOLERANCES ARE
ONE PLACE (.0) ± .030
TWO PLACE (.00) ± .015
THREE PLACE (.000) ± .005
ANGLES ±
RAW MATERIAL - COMMERCIAL STANDARD
DIMENSIONS ARE IN INCHES AND ARE TO BE MET BEFORE PROTECTIVE COATINGS ARE APPLIED
MICRO SWITCH STANDARDS APPLY
WEIGHT

CATALOG LISTING M 4TL11-76 SERIES CHART 1 PAGE 1 OF 1
ISSUE 6
REVISIONS A CO-81150 J A K 19 JUN 95
REPLACES 4TL11-76 SERIES
RELEASE NO CO-78497
CHECK
CHECK 13 JUL 94 KAG
CHECK
CHECK 12 JUL 94 SAV
DRAWN
FORMTEK