MICRO SWITCH
FREEPORT ILLINOIS U S A
A DIVISION OF HONEYWELL
FED. MFG. CODE 91929

SWITCH-TOGGLE

CATALOG LISTING
4TL57 SERIES
CHART 1

THIS DRAWING COVERS A PROPRIETARY ITEM AND IS THE PROPERTY OF MICRO SWITCH, A DIVISION OF HONEYWELL. THIS DRAWING IS NOT TO BE COPIED OR USED WITHOUT THE APPROVAL OF MICRO SWITCH.

CATALOG LISTING	CIRCUIT WITH TOGGLE IN: EXTREME POSITION KEYWAY SIDE	CENTER	EXTREME POSITION OPPOSITE KEYWAY	MILITARY RATING (AMPS) RESISTIVE LOAD DC VOLTS 28	125	250	AC VOLTS 125	250	LAMP LOAD 28 VDC	125 VAC	INDUCTIVE LOAD 28 VDC	125 VAC
4TL57-1	ON	OFF	ON	20	.75	.5	15	6	5	4	12	15
4TL57-2	OFF	NONE	ON									
4TL57-3	ON	NONE	ON									
4TL57-21	NONE	OFF	ON	(REFER TO L191 FOR UL RATING)								
4TL57-31	NONE	ON	ON									
4TL57-4	MOM OFF	NONE	ON	18	.75	.5	11	6	4	2	10	8
4TL57-5	MOM ON	OFF	ON									
4TL57-6	MOM ON	NONE	OFF									
4TL57-7	MOM ON	OFF	MOM ON									
4TL57-8	MOM ON	NONE	ON									
4TL57-51	NONE	ON	MOM ON	(REFER TO L192 FOR UL RATING)								
4TL57-61	MOM ON	OFF	NONE									

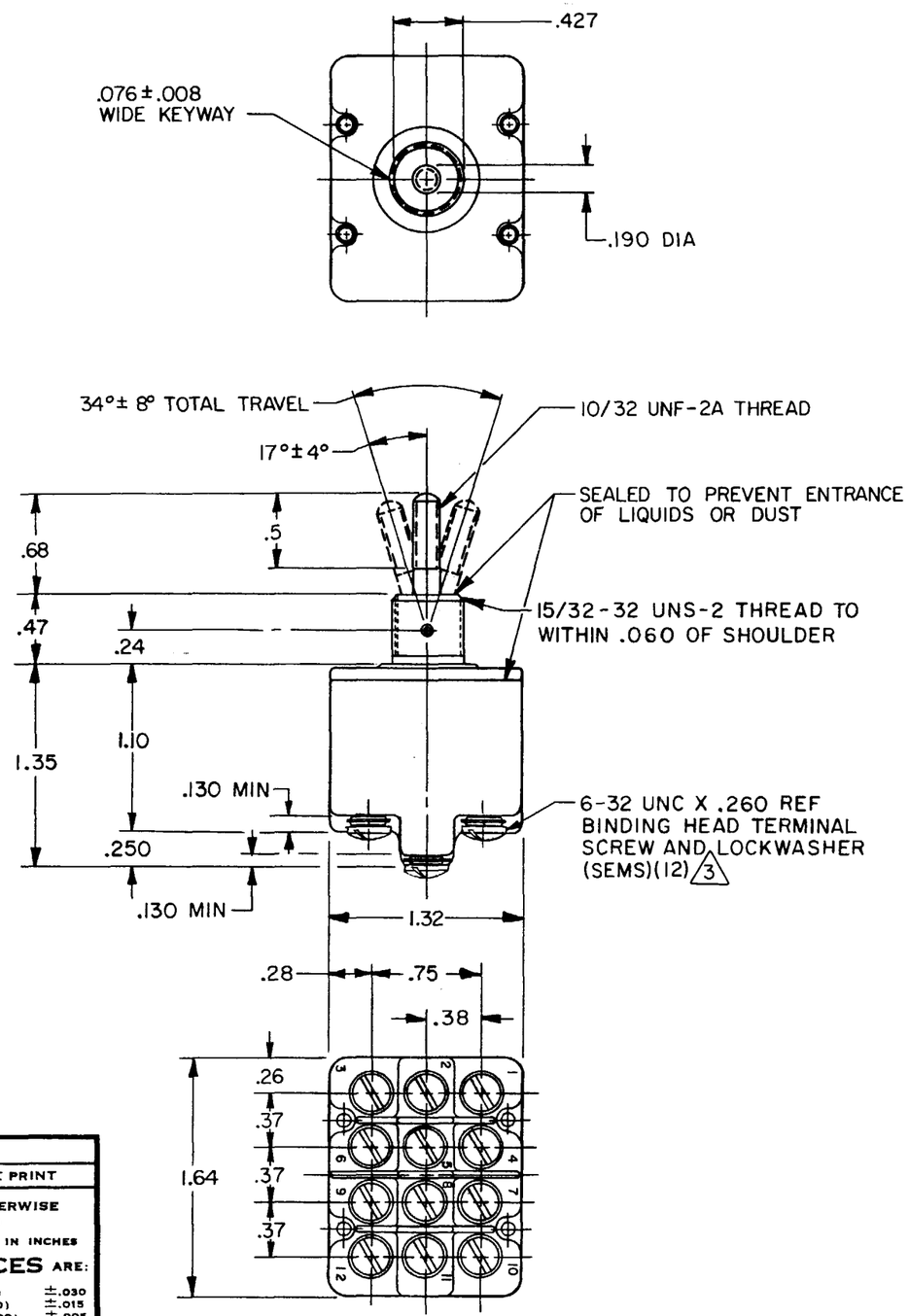

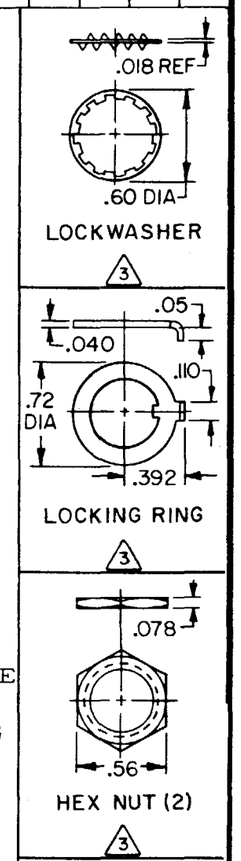

NOTES
1 - SWITCHES ARE CAPABLE OF WITHSTANDING A TEMPERATURE OF 160°F CONTINUOUSLY AT FULL RATED LOAD
2 - CIRCUIT DESIGNATION AND MICRO SWITCH CATALOG LISTING MARKED ON SIDE OF SWITCH
3 - FURNISHED UNASSEMBLED
4 - FOR TERMINAL COVER SEE MICRO SWITCH CAT. LIST. 5PA9

L191 15A 125, 250, 277 VAC
1/2HP 125 VAC
1HP 250, 277 VAC
5A 125 VAC "L"

L192 10A 125, 250, 277 VAC
1/4HP 125 VAC,
1/2HP 250, 277 VAC
3A 125 VAC "L"

SCALE FULL
DO NOT SCALE PRINT
UNLESS OTHERWISE NOTED
DIMENSIONS ARE IN INCHES
TOLERANCES ARE:
ONE PLACE (.0) ±.030
TWO PLACE (.00) ±.015
THREE PLACE (.000) ±.005
ANGLES ±
WEIGHT

DRAWN R J H 9 FEB 83
CHECK
CHECK
CHECK
CHECK
REPLACES
RELEASE NO. CO 34506
DRAWING NUMBER 4TL57 SERIES CHART 1 PAGE 1 OF 1
ISSUE M 8

REVISIONS
A CO-81150 J A K 19 JUN 95
B CO-94444 J A 23 NOV 99

FORMTEK