MICRO SWITCH
A DIVISION OF MINNEAPOLIS-HONEYWELL REGULATOR COMPANY
FREEPORT, ILLINOIS
FED. MFR. CODE 91929

PACKET

CATALOG LISTING
★ 5PAI

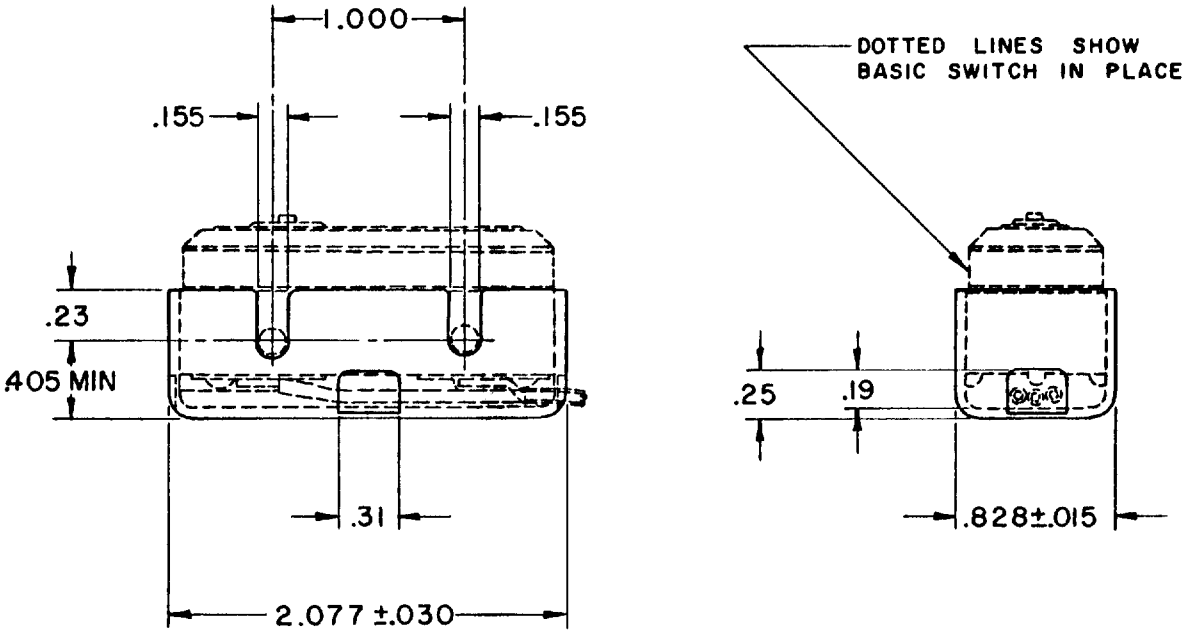

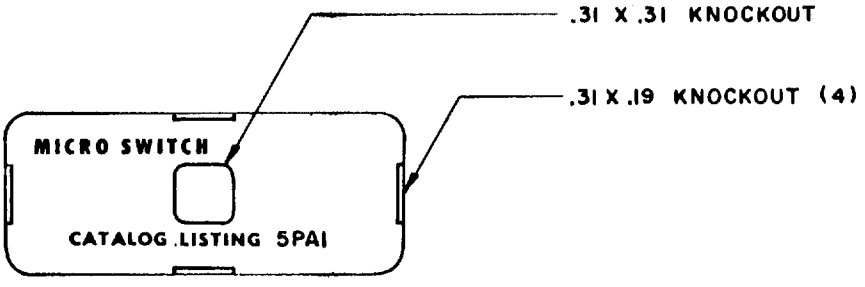

NOTE –
1 – PLASTIC MATERIAL– GENERAL PURPOSE PHENOLIC

THIS DRAWING COVERS A PROPRIETARY ITEM AND IS THE PROPERTY OF MICRO SWITCH, A DIVISION OF MINNEAPOLIS-HONEYWELL REGULATOR CO. THIS DRAWING IS NOT TO BE COPIED OR USED WITHOUT THE APPROVAL OF MICRO SWITCH.

CHARACTERISTICS	ELECTRICAL DATA		SCALE FULL
	CONTACT ARRANGEMENT	BREAK DISTANCE	DO NOT SCALE PRINT
			UNLESS OTHERWISE SPECIFIED DIMENSIONS ARE IN INCHES
			TOLERANCES ARE: ONE PLACE (.0) ±.030; TWO PLACE (.00) ±.015; THREE PLACE (.000) ±.005; ANGLES ±
			WEIGHT

(M) 5PAI ISSUE 1
REPLACES
5PAI
RELEASE NO.
M
DRAWING NUMBER
ISSUE 5
CHECK

REVISIONS

A	C09600	OMW 18 OCT 60	01DEC11
B	C031858	RER 19 MAR 73	
C	C062204	WJK 5 NOV 87	CMH
D	0084419	SBH 01DEC11	CHECK

CHECK 8 C 14 19 OCT 60
CHECK
DRAWN OMW 18 OCT 60

FO-50376