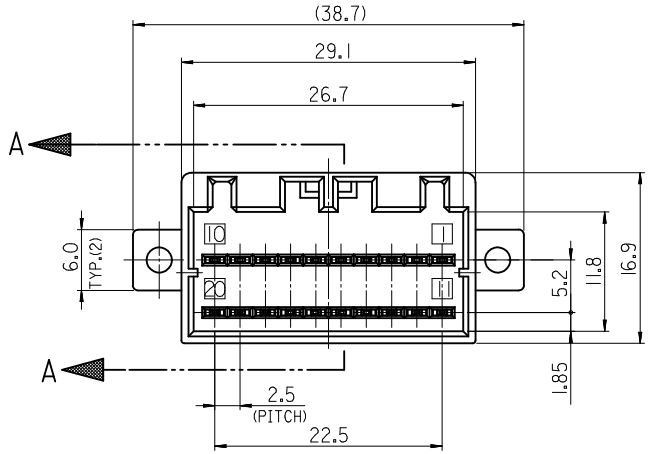

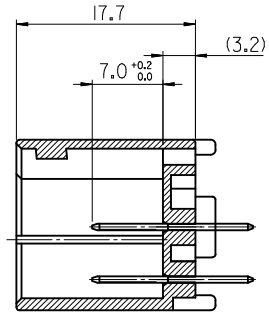

SECT.A-A

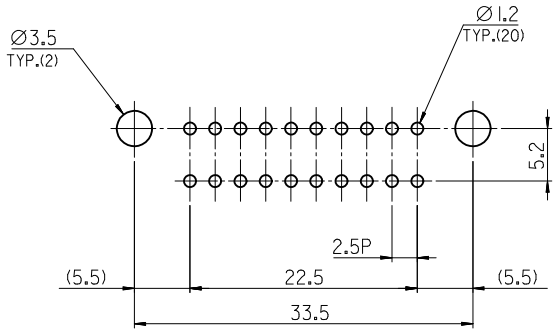

RECOMMENDED P.C.B HOLE DIMENSION
(MOUNT SIDE)

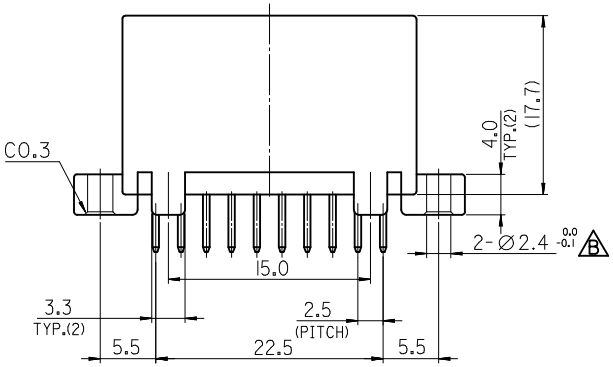

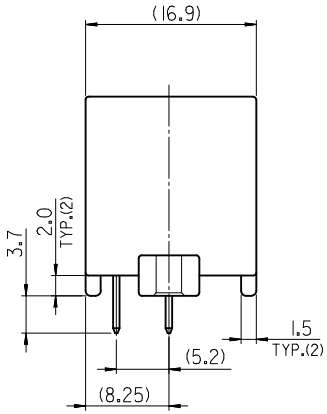

NOTES

1.APPLICABLE FEMALE HOUSING : 35564-2015

2.APPLICABLE FEMALE TERMINAL : 50654-1001,50655-1068
50655-1031

3.MATERIAL:HOUSING-POLYESTER (PBT)
TERMINAL-BRASS, FINISH-TIN PLATING

<TABLE 1>

MATERIAL NO.	ORDER NO.	COLOR
681512015	68151-2015	GRAY
681512016	68151-2016	WHITE

REVISED
EC NO: KTR2011-0004 2010/11/30
DRWN:EOKIM 2010/11/30
CHKD:BCYOON 2010/12/01
APPR:YUNSIKKIM
DESCRIPTION
REV

QUALITY SYMBOLS
▼=0
(C)=0

GENERAL TOLERANCES (UNLESS SPECIFIED)

	mm	INCH
4 PLACES	± ---	± ---
3 PLACES	± ---	± ---
2 PLACES	± 0.20	± ---
1 PLACE	± 0.30	± ---
ANGULAR ± 1 °		

DRAFT WHERE APPLICABLE MUST REMAIN WITHIN DIMENSIONS

DIMENSION STYLE: MM ONLY
SCALE: 2:1
DESIGN UNITS: METRIC
THIRD ANGLE PROJECTION

DRAWN BY: YSIKKIM DATE: 1999/05/12
CHECKED BY: BKCHOI DATE: 1999/05/12
APPROVED BY: CWLEE DATE: 1999/05/12

TITLE: 040 WIRE-TO-BOARD HEADER ASS'Y 20P (VERTICAL TYPE)

molex MOLEX INCORPORATED

MATERIAL NO.: SEE TABLE1
DOCUMENT NO.: SD-68151-001
SHEET NO.: 1 OF 1
SIZE: A3

THIS DRAWING CONTAINS INFORMATION THAT IS PROPRIETARY TO MOLEX INCORPORATED AND SHOULD NOT BE USED WITHOUT WRITTEN PERMISSION