CKT. SIZE	DIM. A REF. (MM)	DIM. A REF. INCH	DIM. B REF. (MM)	DIM. B REF. INCH
4	(5.08)	.200	(2.54)	.100
6	(7.62)	.300	(5.08)	.200
8	(10.16)	.400	(7.62)	.300
10	(12.70)	.500	(10.16)	.400
12	(15.24)	.600	(12.70)	.500
14	(17.78)	.700	(15.24)	.600
16	(20.32)	.800	(17.78)	.700
18	(22.86)	.900	(20.32)	.800
20	(25.40)	1.000	(22.86)	.900
22	(27.94)	1.100	(25.40)	1.000
24	(30.48)	1.200	(27.94)	1.100
26	(33.02)	1.300	(30.48)	1.200
28	(35.56)	1.400	(33.02)	1.300
30	(38.10)	1.500	(35.56)	1.400
32	(40.64)	1.600	(38.10)	1.500
34	(43.18)	1.700	(40.64)	1.600
36	(45.72)	1.800	(43.18)	1.700
38	(48.26)	1.900	(45.72)	1.800
40	(50.80)	2.000	(48.26)	1.900
42	(53.34)	2.100	(50.80)	2.000
44	(55.88)	2.200	(53.34)	2.100
46	(58.42)	2.300	(55.88)	2.200
48	(60.96)	2.400	(58.42)	2.300
50	(63.50)	2.500	(60.96)	2.400
52	(66.04)	2.600	(63.50)	2.500
54	(68.58)	2.700	(66.04)	2.600
56	(71.12)	2.800	(68.58)	2.700
58	(73.66)	2.900	(71.12)	2.800
60	(76.20)	3.000	(73.66)	2.900
62	(78.74)	3.100	(76.20)	3.000
64	(81.28)	3.200	(78.74)	3.100
66	(83.82)	3.300	(81.28)	3.200
68	(86.36)	3.400	(83.82)	3.300
70	(88.90)	3.500	(86.36)	3.400
72	(91.44)	3.600	(88.90)	3.500
74	(93.98)	3.700	(91.44)	3.600
76	(96.52)	3.800	(93.98)	3.700
78	(99.06)	3.900	(96.52)	3.800
80	(101.06)	4.000	(99.06)	3.900
82	(104.14)	4.100	(101.06)	4.000
84	(106.68)	4.200	(104.14)	4.100
86	(109.22)	4.300	(106.68)	4.200
88	(111.76)	4.400	(109.22)	4.300
90	(114.30)	4.500	(111.76)	4.400
92	(116.84)	4.600	(114.30)	4.500
94	(119.38)	4.700	(116.84)	4.600
96	(121.92)	4.800	(119.38)	4.700
98	(124.46)	4.900	(121.92)	4.800
100	(127.00)	5.000	(124.46)	4.900

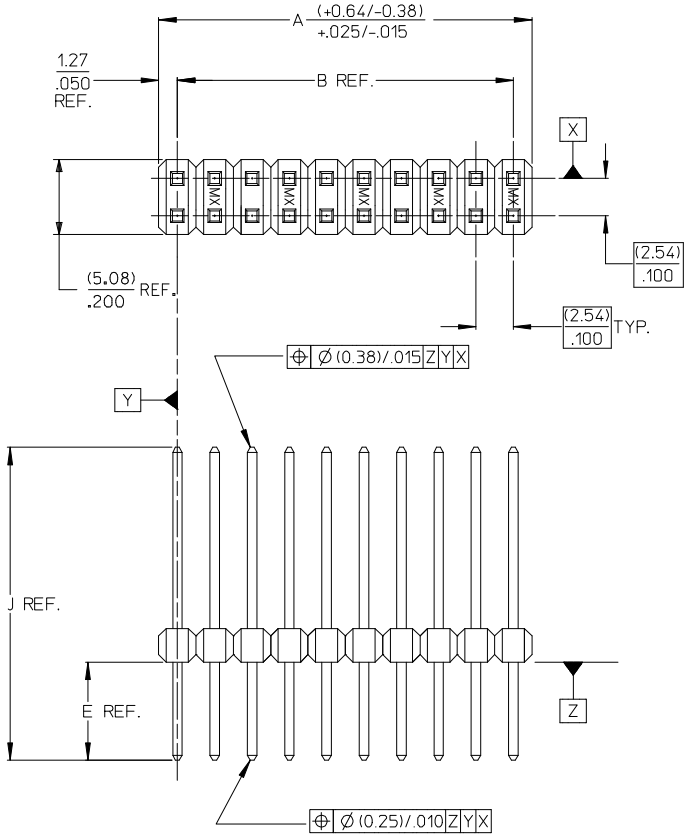

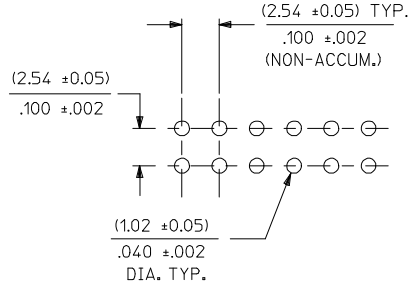

RECOMMENDED P.C. BOARD HOLE LAYOUT

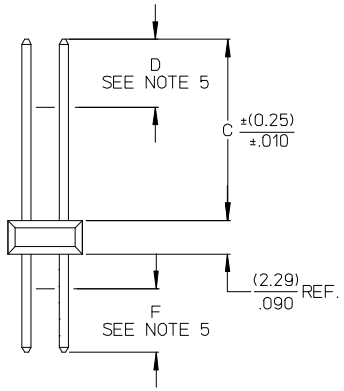

NOTES:

1. MATERIAL:
   PIN: COPPER ALLOY
   WAFER: GLASS FILLED LCP (LIQUID CRYSTAL POLYMER, UL 94V-0, COLOR: BLACK.
2. FINISH:

   TIN = (0.00380)/.000150 MINIMUM TIN PLATE OVER (0.00127)/.000050 MINIMUM NICKEL PLATE.
   15 GOLD = (0.00038)/.000015 MINIMUM GOLD PLATE IN SELECT AREA, (0.00190)/.000075 MINIMUM TIN PLATE IN SELECT AREA, OVER (0.00127)/.000050 MINIMUM NICKEL PLATE OVERALL.
   30 GOLD = (0.00076)/.000030 MINIMUM GOLD PLATE IN SELECT AREA, (0.00190)/.000075 MINIMUM TIN PLATE IN SELECT AREA, OVER (0.00127)/.000050 MINIMUM NICKEL PLATE OVERALL.
   GT15 = (0.00038)/.000015 MINIMUM GOLD PLATE IN SELECT AREA, (0.00254)/.000100 MINIMUM TIN PLATE IN SELECT AREA, OVER (0.00127)/.000050 MINIMUM NICKEL PLATE OVERALL.

3. PRODUCT SPECIFICATION NONE
4. PACKAGING INFORMATION: (UNLESS OTHERWISE NOTED IN TABLES) BULK PACK PER PK-70873-0353.
5. MEASURE POINT FOR PLATING THICKNESS.
6. FOR ASSEMBLIES WITH VOIDED PINS, REFER TO DRAWING NO. SDA-70280-5001-9999.
7. PIN PUSHOUT FORCE 3 POUNDS MINIMUM IN EITHER DIRECTION.
8. FOR ILLUSTRATION PURPOSES, 20 (DUAL 10) CIRCUIT SIZE IS SHOWN.
9. PINS MEET SOLDERABILITY SPEC SMES-152. ABSENCE OF PLATING PERMISSIBLE AT BANDOLIER PIN FAYING SURFACE. (APPROXIMATELY (0.64)/.025 INCH LONG BY (0.15)/.006 INCH WIDE AT 2 LOCATIONS)
10. PARTS CONFORM TO CLASS B OF COSMETIC SPECIFICATION PS-45499-002

* THE PRIMARY SHIPPING CARTON WILL BE LABELED "COMPLIANT TO RoHS DIRECTIVE 2002/95/EC AND ELV ANNEX II OF DIRECTIVE 2000/53/EC". CARTONS WITHOUT THIS LABEL MAY CONTAIN PRODUCT WITH LEAD PLATING.

SHT.	REV.
9	G6
8	G5
7	G3
6	G3
5	G3
4	G3
3	G3
2	G3
1	G6

ADD P/N 70280-1254
EC NO: UCP2008-2306 2008/03/31
DRWN: JBELL 2008/04/07
CH'KD: LSCHMIDT 2008/04/24
APPR: FSMITH
DESCRIPTION
REV G6

QUALITY SYMBOLS
▼=0
Ⓒ=0

GENERAL TOLERANCES (UNLESS SPECIFIED)

	mm	INCH
4 PLACES	± ---	± ---
3 PLACES	± ---	± .005
2 PLACES	± 0.13	± .01
1 PLACE	± 0.25	± ---
ANGULAR ±1/2°		

DRAFT WHERE APPLICABLE MUST REMAIN WITHIN DIMENSIONS

DIMENSION STYLE: MM/IN
SCALE: 4:1
DESIGN UNITS: INCH
THIRD ANGLE PROJECTION

DRAWN BY: SMR DATE: 04/19/1993
CHECKED BY: DATE:
APPROVED BY: SMR DATE: 04/19/1993

TITLE: SALES ASSY-HIGH TEMP. DUAL ROW WAFER W/BREAK-OFF OPT. .025 SQ PINS

MOLEX INCORPORATED

MATERIAL NO.: SEE TABLE
DOCUMENT NO.: SDA-70280-0001-4000
SHEET NO.: 1 OF 9
SIZE: C

THIS DRAWING CONTAINS INFORMATION THAT IS PROPRIETARY TO MOLEX INCORPORATED AND SHOULD NOT BE USED WITHOUT WRITTEN PERMISSION

ENGINEERING NUMBER A-70280-	RELEASE FOR MANUFACTURE	E REF.	J REF.	C ±(0.25) .010	CONNECTOR END PLATING TYPE	CONNECTOR END PLATING D MEAS.	P.C. BOARD END PLATING TYPE	P.C. BOARD END PLATING F MEAS.	FOR PACKAGING INFORMATION, SEE NOTE 4, SHEET 1 (UNLESS OTHERWISE SPECIFIED BELOW)
-0439/-0448	R.F.M.	(2.72) .107	(11.10) .437	(6.10) .240	TIN	(2.54) .100	TIN	(1.27) .050	
-0449/-0458	R.F.M.	(2.72) .107	(11.10) .437	(6.10) .240	15 GOLD	(2.54) .100	TIN	(1.27) .050	
-0459/-0468	R.F.M.	(2.72) .107	(11.10) .437	(6.10) .240	30 GOLD	(2.54) .100	TIN	(1.23) .048	
-0469/-0478	R.F.M.	(2.79) .110	(13.21) .520	(8.13) .320	TIN	(4.57) .180	TIN	(1.27) .050	
-0479/-0488	R.F.M.	(2.79) .110	(13.21) .520	(8.13) .320	15 GOLD	(4.57) .180	TIN	(1.27) .050	
-0489/-0498	R.F.M.	(2.79) .110	(13.21) .520	(8.13) .320	30 GOLD	(4.57) .180	TIN	(1.27) .050	
-0499/-0508	R.F.M.	(3.94) .155	(12.32) .485	(6.10) .240	30 GOLD	(2.54) .100	TIN	(1.27) .050	

CKTS	EDP NUMBER	ENG NUMBER	EDP NUMBER	ENG NUMBER	EDP NUMBER	ENG NUMBER	EDP NUMBER	ENG NUMBER	EDP NUMBER	ENG NUMBER	EDP NUMBER	ENG NUMBER	EDP NUMBER	ENG NUMBER	CKTS
82	70280-0439	A-70280-0439	70280-0449	A-70280-0449	70280-0459	A-70280-0459	70280-0469	A-70280-0469	70280-0479	A-70280-0479	70280-0489	A-70280-0489	70280-0499	A-70280-0499	82
84	70280-0440	A-70280-0440	70280-0450	A-70280-0450	70280-0460	A-70280-0460	70280-0470	A-70280-0470	70280-0480	A-70280-0480	70280-0490	A-70280-0490	70280-0500	A-70280-0500	84
86	70280-0441	A-70280-0441	70280-0451	A-70280-0451	70280-0461	A-70280-0461	70280-0471	A-70280-0471	70280-0481	A-70280-0481	70280-0491	A-70280-0491	70280-0501	A-70280-0501	86
88	70280-0442	A-70280-0442	70280-0452	A-70280-0452	70280-0462	A-70280-0462	70280-0472	A-70280-0472	70280-0482	A-70280-0482	70280-0492	A-70280-0492	70280-0502	A-70280-0502	88
90	70280-0443	A-70280-0443	70280-0453	A-70280-0453	70280-0463	A-70280-0463	70280-0473	A-70280-0473	70280-0483	A-70280-0483	70280-0493	A-70280-0493	70280-0503	A-70280-0503	90
92	70280-0444	A-70280-0444	70280-0454	A-70280-0454	70280-0464	A-70280-0464	70280-0474	A-70280-0474	70280-0484	A-70280-0484	70280-0494	A-70280-0494	70280-0504	A-70280-0504	92
94	70280-0445	A-70280-0445	70280-0455	A-70280-0455	70280-0465	A-70280-0465	70280-0475	A-70280-0475	70280-0485	A-70280-0485	70280-0495	A-70280-0495	70280-0505	A-70280-0505	94
96	70280-0446	A-70280-0446	70280-0456	A-70280-0456	70280-0466	A-70280-0466	70280-0476	A-70280-0476	70280-0486	A-70280-0486	70280-0496	A-70280-0496	70280-0506	A-70280-0506	96
98	70280-0447	A-70280-0447	70280-0457	A-70280-0457	70280-0467	A-70280-0467	70280-0477	A-70280-0477	70280-0487	A-70280-0487	70280-0497	A-70280-0497	70280-0507	A-70280-0507	98
100	70280-0448	A-70280-0448	70280-0458	A-70280-0458	70280-0468	A-70280-0468	70280-0478	A-70280-0478	70280-0488	A-70280-0488	70280-0498	A-70280-0498	70280-0508	A-70280-0508	100

UPDATE DIMENSIONS
EC NO: UCP2007-1440 2006/12/18
DRWN:PRIDDER 2006/12/18
CHKD:ADERR 2007/01/10
APPR:FSMITH
DESCRIPTION
REV G3

QUALITY SYMBOLS
▼=0
(C)=0

GENERAL TOLERANCES (UNLESS SPECIFIED)

	mm	INCH
4 PLACES	± ---	± ---
3 PLACES	± ---	± ---
2 PLACES	± ---	± ---
1 PLACE	± ---	± ---
ANGULAR ±1/2°		

DRAFT WHERE APPLICABLE MUST REMAIN WITHIN DIMENSIONS

DIMENSION STYLE: MM/IN
SCALE: ---
DESIGN UNITS: INCH
THIRD ANGLE PROJECTION

DRAWN BY: DMORGAN DATE: 04/12/16
CHECKED BY: BBARER DATE: 04/12/16
APPROVED BY: SMILLER DATE: 04/12/16

TITLE: SALES ASSY-HIGH TEMP. DUAL ROW WAFER W/BREAK-OFF OPTION, .025 SQ PINS

molex MOLEX INCORPORATED

MATERIAL NO.: SEE CHART
DOCUMENT NO.: SDA-70280-0001-4000
SHEET NO.: 5 OF 8
SIZE: C

THIS DRAWING CONTAINS INFORMATION THAT IS PROPRIETARY TO MOLEX INCORPORATED AND SHOULD NOT BE USED WITHOUT WRITTEN PERMISSION