MICRO SWITCH
a Honeywell Division
FED.MFG.CODE 91929

ASSEMBLY - PUSHBUTTON SWITCH

CATALOG LISTING
702PB542-WBW

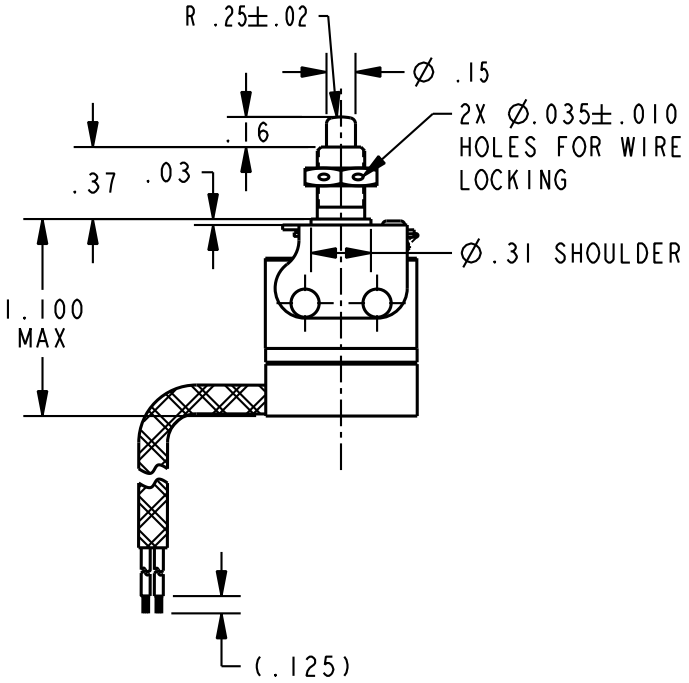

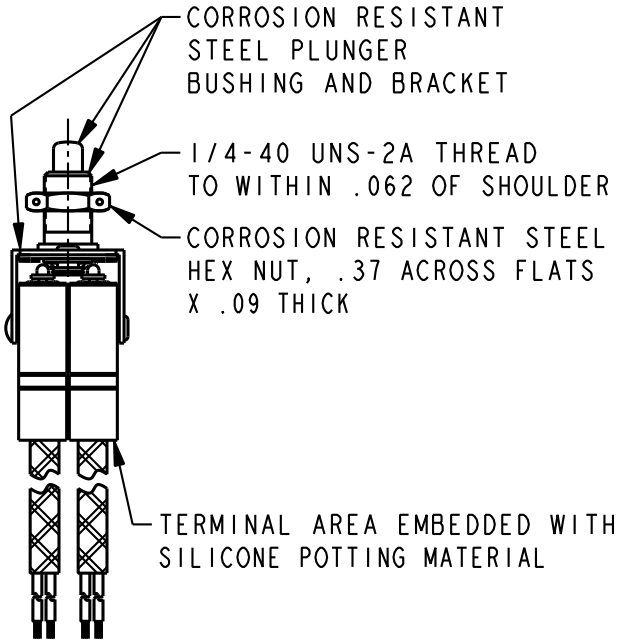

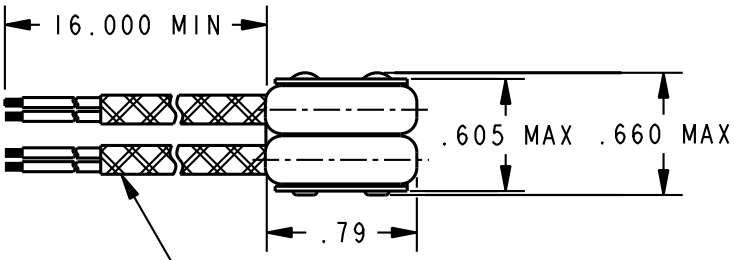

2X CABLE
PER MIL-C-27500-20RC2N06
OR MIL-C-27500-20RC2N09
(2 CONDUCTORS PER JACKET,
C-BLUE, N.O.-WHITE, ON BOTH
BASICS)

NOTES
1 - UNIT INCLUDES 2X "20HM6-1" TYPE BASIC SWITCHES
2 - RECOMMENDED FOR MANUAL OPERATION ONLY
3 - SWITCHES DO NOT NECESSARILY OPERATE SIMULTANEOUSLY
4 - WIRE ENDS ARE TINNED
5 - FOR USE IN TEMPERATURE RANGE -65°F TO 392°F
ANSI Y14.5M-1982 APPLIES

THIS DRAWING COVERS A PROPRIETARY ITEM AND IS THE PROPERTY OF MICRO SWITCH, A DIVISION OF HONEYWELL. THIS DRAWING IS NOT TO BE COPIED OR USED WITHOUT THE APPROVAL OF MICRO SWITCH.

THIRD ANGLE PROJECTION

CHARACTERISTICS	ELECTRICAL DATA	SCALE FULL / DO NOT SCALE PRINT
OPERATING FORCE ---------- 2 LBS MAX	CONTACT ARRANGEMENT 2X S P N O	UNLESS OTHERWISE SPECIFIED TOLERANCES ARE
OVERTRAVEL FORCE --------- 3 LBS MAX	28 VOLTS DC RATING	ONE PLACE (.0) ±.030
RELEASE FORCE ---------- 2 OZ MIN	INDUCTIVE---SEA LEVEL---1/4 AMP	TWO PLACE (.00) ±.015
PRETRAVEL ---------- .110 MAX	70,000 FT---1/4 AMP	THREE PLACE (.000) ±.005
DIFFERENTIAL TRAVEL ------- .050 MAX	RESISTIVE---SEA LEVEL---1/2 AMP	ANGLES ±
OVERTRAVEL	70,000 FT---1/2 AMP	WEIGHT .04 LB
FREE POSITION		

CATALOG LISTING 702PB542-WBW
PAGE 1 OF 1
RELEASE NO. PR-23332
REPLACES -
ISSUE 7
CMH
CHECK

REVISIONS

A	201097	S A V 18 AUG 00
B	201411	KED 20CT00
C	0080362	VKR 16AUG11

CHECK
18 AUG 00
SAV
CHECK
18 AUG 00
DRAWN S A V 18 AUG 00
PTC/CAD 2D