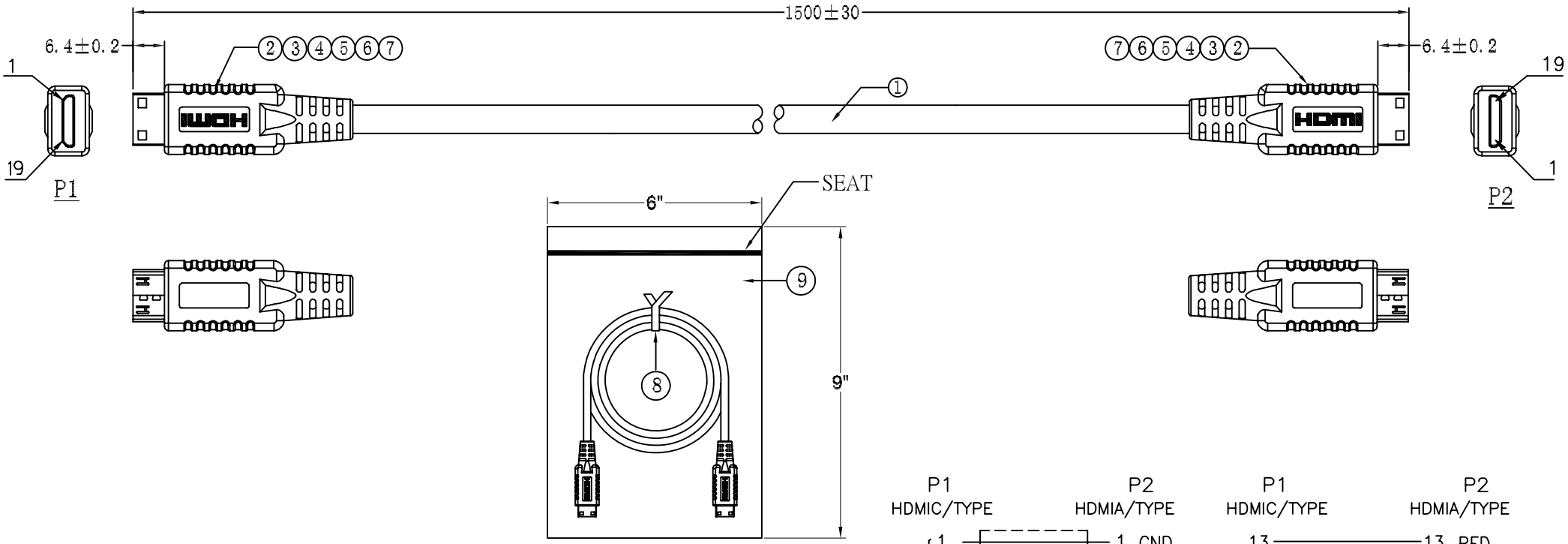

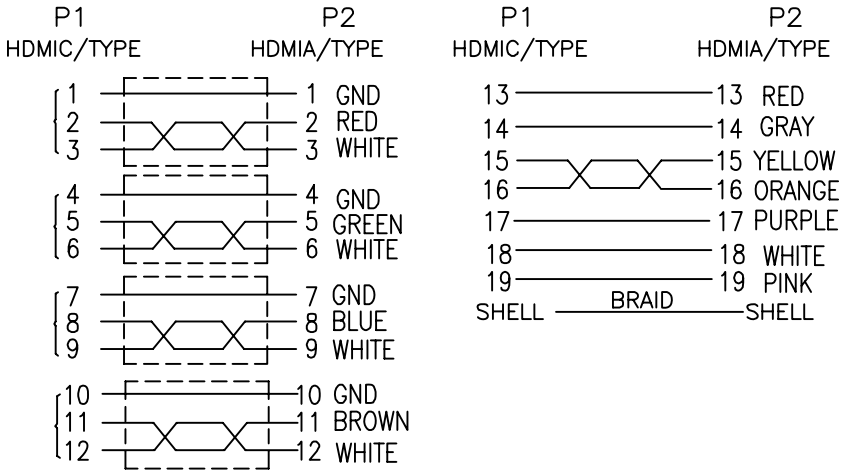

NOTE:
1. TEST:DC 300V/1s
2. INSULATION RESISTANCE:10m ohm
3. CONTACT RESISTANCE:2 ohm
4. PRODUCTS MEASURE UP TO THE ROHS
5. PVC TEGUMENT

No	DESCRIPTION	QTY
9	PE BAG 6''*9''*0.04MM	1PCS
8	ELLIPTICAL CABLE TIE WITH CORE L=70MM	1PCS
7	TIN WIRE LEAD-FREE ø0.6 ROHS	0.45g
6	P1&P2 PVC , BLACK 45P	10g
5	CONDUCTIVE COPPER PLATINUM P1& P2.W:20MM*L:35MM	2PCS
4	GUMMED PAPER W:15MM	0.07m
3	PE1&P2 TRANSPARENT PE INTERAL MODEL MATERIALS,LOW DENSITY	4g
2	HDMI C TYPE MALE: SHORT BODY PIN G/F,IRON SHELL-PLATED NICKEL,INSULATION BLACK	2PCS
1	UL20276[30AWG(7/0.10TS)*1P+EA+AL/MY]*4+30AWG(7/0.10TS)*1P+30AWG(7/0.10TS)* 5C+AEB(16/6/0.12AM) OD:6.0mm PVC BLACK TEGUMENT CUT L=990±10mm(LS)	1PCS

-TOLERANCES- UNLESS OTHERWISE SPECIFIED 公差参考表									
X.X	±0.38	X.X°	±3.00°	APPD:	TITLE: HDMI C/M TO C/M CABLE PVC				
X.XX	±0.25	X.XX°	±2.00°	CHECK:	PRODUCT NO: 742-20010-00150				
X.XXX	±0.10	X.XXX°	±1.00°	DRAW:	DATE	SCALE	UNIT	TYPE	PAGE
					2013.08.20	1:1	mm	Z	1 / 1

CnC Tech, LLC