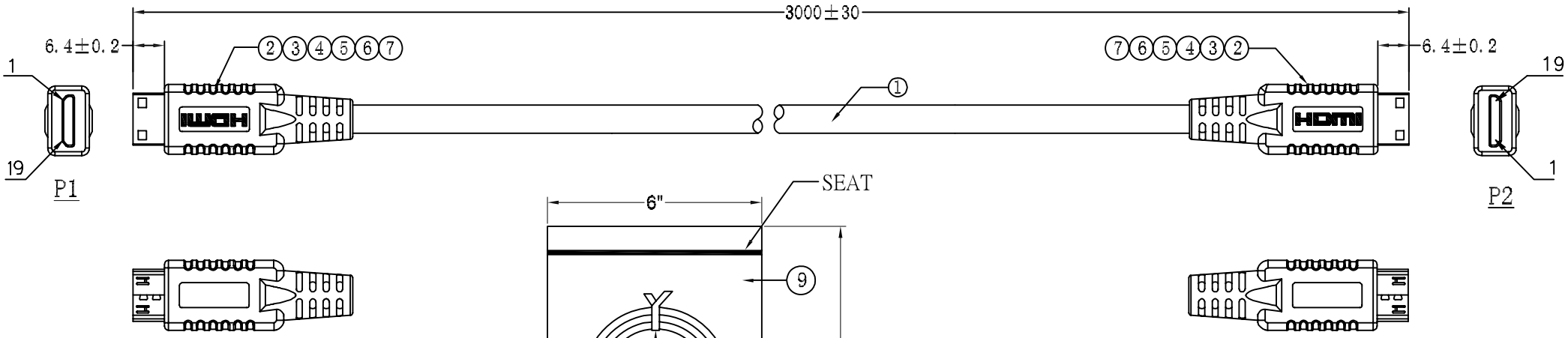


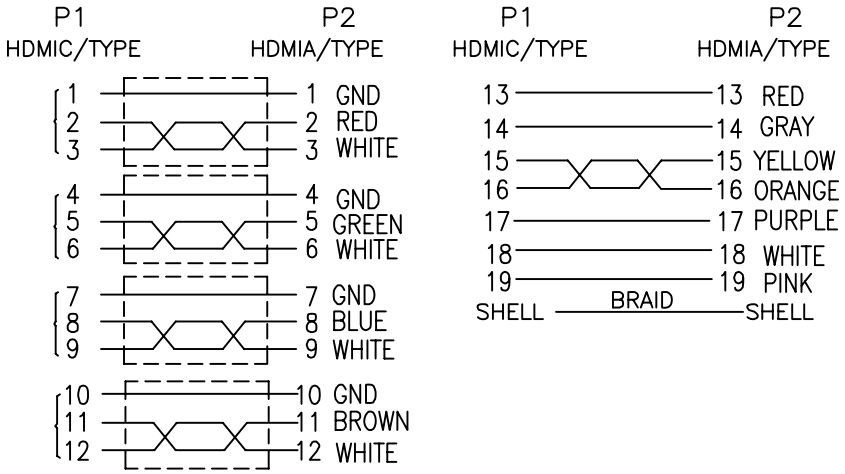


NOTE:
1. TEST:DC 300V/1s
2. INSULATION RESISTANCE:10m ohm
3. CONTACT RESISTANCE:2 ohm
4. PRODUCTS MEASURE UP TO THE ROHS
5. PVC TEGUMENT

| No | DESCRIPTION | QTY |
|---|---|---|
| 9 | PE BAG 6''*9''*0.04MM | 1PCS |
| 8 | ELLIPTICAL CABLE TIE WITH CORE L=70MM | 1PCS |
| 7 | TIN WIRE LEAD-FREE ø0.6 ROHS | 0.45g |
| 6 | P1&P2 PVC , BLACK 45P | 10g |
| 5 | CONDUCTIVE COPPER PLATINUM P1& P2.W:20MM*L:35MM | 2PCS |
| 4 | GUMMED PAPER W:15MM | 0.07m |
| 3 | PE1&P2 TRANSPARENT PE INTERAL MODEL MATERIALS,LOW DENSITY | 4g |
| 2 | HDMI C TYPE MALE: SHORT BODY PIN G/F,IRON SHELL-PLATED NICKEL,INSULATION BLACK | 2PCS |
| 1 | UL20276[30AWG(7/0.10TS)*1P+EA+AL/MY]*4+30AWG(7/0.10TS)*1P+30AWG(7/0.10TS)* 5C+AEB(16/6/0.12AM) OD:6.0mm PVC BLACK TEGUMENT CUT L=990±10mm(LS) | 1PCS |

| -TOLERANCES- UNLESS OTHERWISE SPECIFIED 公差参考表 | | | | CnC Tech, LLC | | | | |
|---|---|---|---|---|---|---|---|---|
| | | | | | TITLE: HDMI C/M TO C/M CABLE PVC | | | |
| X.X | ±0.38 | X.X° | ±3.00° | APPD: | PRODUCT NO: 742-20010-00300 | | | |
| X.XX | ±0.25 | X.XX° | ±2.00° | CHECK: | DATE | SCALE | UNIT | TYPE | PAGE |
| X.XXX | ±0.10 | X.XXX° | ±1.00° | DRAW: | 2013.08.20 | 1:1 | mm | Z | 1 / 1 |