CUSTOMER TERMINAL	RoHS	LEAD(Pb)-FREE
Sn100%	Yes	Yes

compliant RoHS WE-MIDCOM

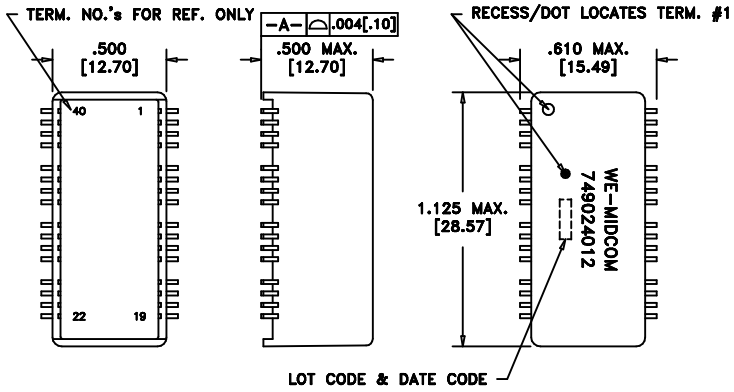

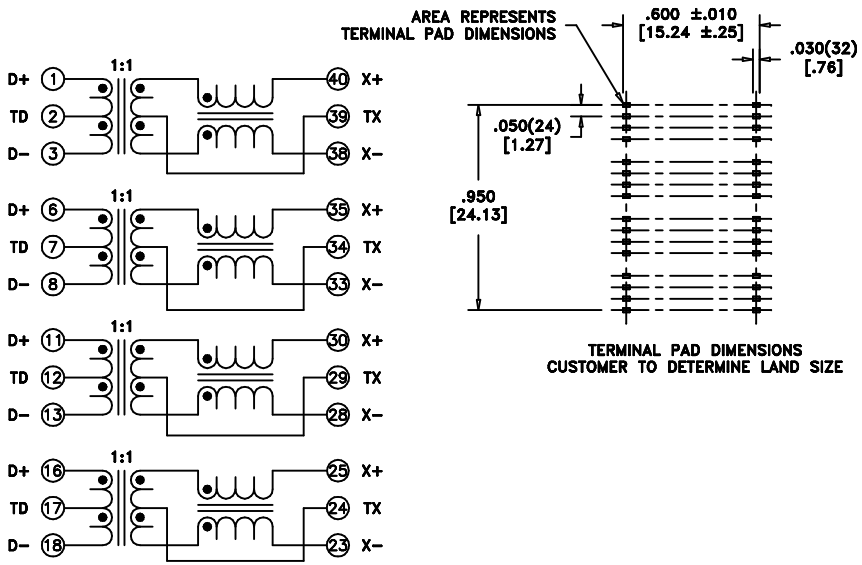

ELECTRICAL SPECIFICATIONS @ 25°C unless otherwise noted:

PARAMETER		TEST CONDITIONS	VALUE
INDUCTANCE	23-25	100kHz, 100mVAC, 8mADC, Lp	350uH min.
INDUCTANCE	28-30	100kHz, 100mVAC, 8mADC, Lp	350uH min.
INDUCTANCE	33-35	100kHz, 100mVAC, 8mADC, Lp	350uH min.
INDUCTANCE	38-40	100kHz, 100mVAC, 8mADC, Lp	350uH min.
DIELECTRIC	1-40	tie(1 thru 18, 23 thru 40), 4800Vrms, 1 second	4000Vrms, 1 minute
TURNS RATIO		Per Schematic	1:1, ±2%
INSERTION LOSS		1M - 100MHz	-1.3dB max.
RETURN LOSS		.5M - 30MHz	-14dB min.
RETURN LOSS		30M - 45MHz	-11dB min.
RETURN LOSS		45M - 60MHz	-9dB min.
RETURN LOSS		60M - 80MHz	-8dB min.
CROSSTALK		1M - 100MHz	-35dB min.
DCMR		1M - 100MHz	-30dB min.
CMRR		1M - 100MHz	-30dB min.

GENERAL SPECIFICATIONS:
OPERATING TEMPERATURE RANGE: -40°C to +85°C.

COPLANARITY: All 32 terminals must lie on a plane within .004 [.10] of Surface A after lead tinning.

Designed to comply with the following requirements as defined by IEC60950-1, EN60950-1, UL60950-1/CSA60950-1 and AS/NZS60950.1:
- Reinforced insulation for a secondary circuit at a working voltage of 250Vrms.

REV.	DATE
6B	10/09
6A	8/09

Packaging Specifications
Method: Tape & Reel
PKG-0464
www.midcom-inc.com

Tolerances unless otherwise specified:
Angles: ±1° Decimals: ±.005 [.13]
Fractions: ±1/64 Footprint: ±.005 [.13]
This drawing is dual dimensioned. Dimensions in brackets are in millimeters.

DRAWING TITLE
TRANSFORMER
eiSos p/n: 749024012

Midcom WE
www.midcom-inc.com
REVISIONS: SEE SHEET 1

DRAWING NO.
749024012
SCALE ---
SHEET 2 OF 8