ASSEMBLY PART NO.	CKT SIZE	DIMENSION			
		A	B	C	D
87833-062*	6	4.00	6.85	8.65	7.00
87833-082*	8	6.00	8.85	10.65	9.00
87833-102*	10	8.00	10.85	12.65	11.00
87833-122*	12	10.00	12.85	14.65	13.00
87833-3424	34	32.00	34.85	36.65	35.00
87833-442*	44	42.00	44.85	46.65	45.00

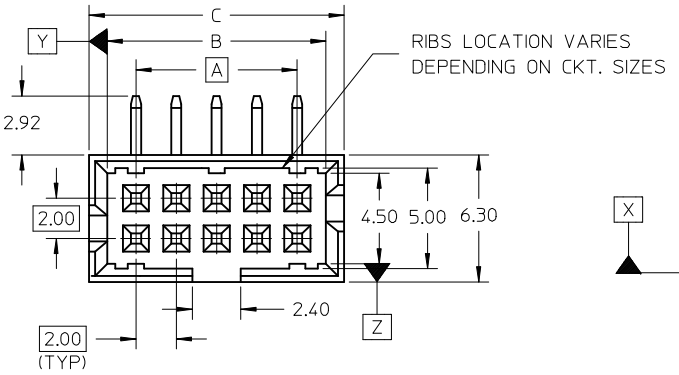

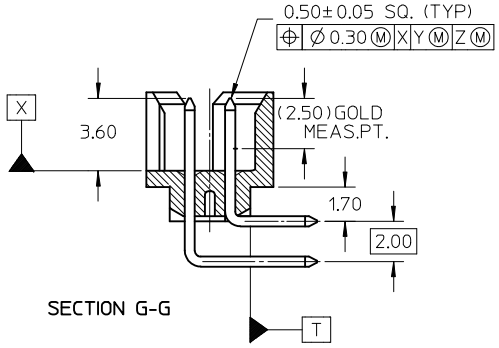

SECTION G-G

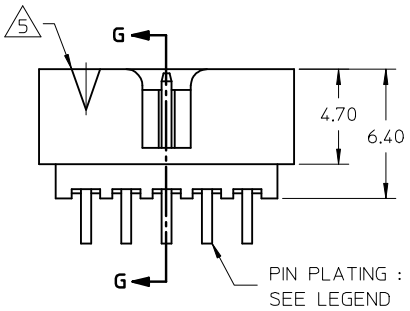

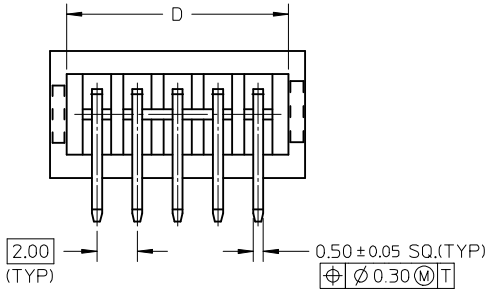

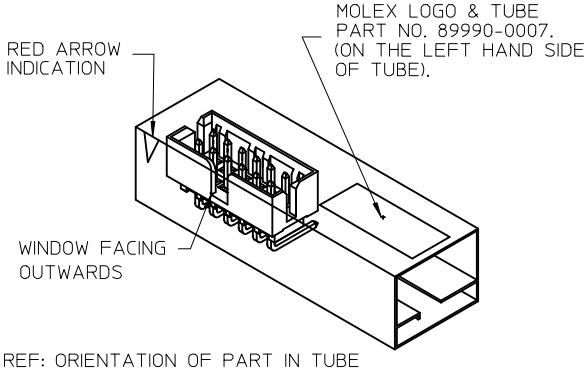

REF: ORIENTATION OF PART IN TUBE

(FOR THE REFERENCE OF PART/TUBE ASSEMBLY)

PART NUMBER LEGEND :

87833 - * * * *

PLATING OPTIONS:

24 - 0.38um/15uin GOLD IN CONTACT AREA AND 1.88um/75uin MIN.TIN IN SOLDER TAIL AREA OVER 1.27um/50uin MIN. NICKEL OVERALL.

25 - 0.76um/30uin GOLD IN CONTACT AREA AND 1.88um/75uin MIN.TIN IN SOLDER TAIL AREA OVER 1.27um/50uin MIN. NICKEL OVERALL.

NOTES:

1. FOR ILLUSTRATION PURPOSES, 10 CIRCUIT SIZE WAFER IS SHOWN.
2. MATERIAL :
   HOUSING : 30% G.F., NYLON 46, UL94V-0, COLOR BLACK.
   PIN : 0.50MM SQ.PHOSPHOR BRONZE.
3. PRODUCT SPECIFICATION PS-87831-027 APPLIES.
4. NO CENTRE POLARIZATION SLOT FOR CKT SIZE 4 AND 6.
5. CKT 4 & 6 HAS NO IDENTIFICATION TAG.
6. THIS HEADER MATES WITH MOLEX:
   a) CRIMP RECEPTACLE HOUSING, 51110 SERIES
      WITH CRIMP TERMINAL, 50394 SERIES.
   b) 2MM MILLIGRID DUAL ROW IDT, 87568 SERIES.
7. PARTS TO BE PACKED IN TUBE WITH MOISTURE BARRIER BAG.

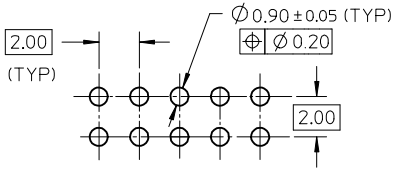

RECOMMENDED PCB PATTERN

ADD 87833-0824/25
EC NO: S2009-0482
DRWN:SKANG 2008/12/24
CH'KD:ATSEE 2009/01/20
APPR:MLONG 2009/02/06
DESCRIPTION
A5
REV

QUALITY SYMBOLS
▼=0
(C)=0

GENERAL TOLERANCES (UNLESS SPECIFIED)	mm	INCH
4 PLACES	± ---	± ---
3 PLACES	± ---	± ---
2 PLACES	± 0.2	± ---
1 PLACE	± ---	± ---
ANGULAR ± 3 °		

DRAFT WHERE APPLICABLE MUST REMAIN WITHIN DIMENSIONS

DIMENSION STYLE: MM ONLY
SCALE: NTS
DESIGN UNITS: METRIC
THIRD ANGLE PROJECTION

DRAWN BY: ATSEE DATE: 2003/10/23
CHECKED BY: KCLING DATE: 2003/11/07
APPROVED BY: SKTOH DATE: 2003/11/07

TITLE: MGRID, SHROUDED HEADER WITH SLOTS AND STANDOFF R/A

molex MOLEX INCORPORATED

MATERIAL NO.: SEE TABLE
DOCUMENT NO.: SD-87833-012
SHEET NO.: 1 OF 1
SIZE: A3

THIS DRAWING CONTAINS INFORMATION THAT IS PROPRIETARY TO MOLEX INCORPORATED AND SHOULD NOT BE USED WITHOUT WRITTEN PERMISSION