MICRO SWITCH
a Honeywell Division
FED. MFG. CODE 91929

ASSEMBLY - SWITCH

CATALOG LISTING
8AC29-UL

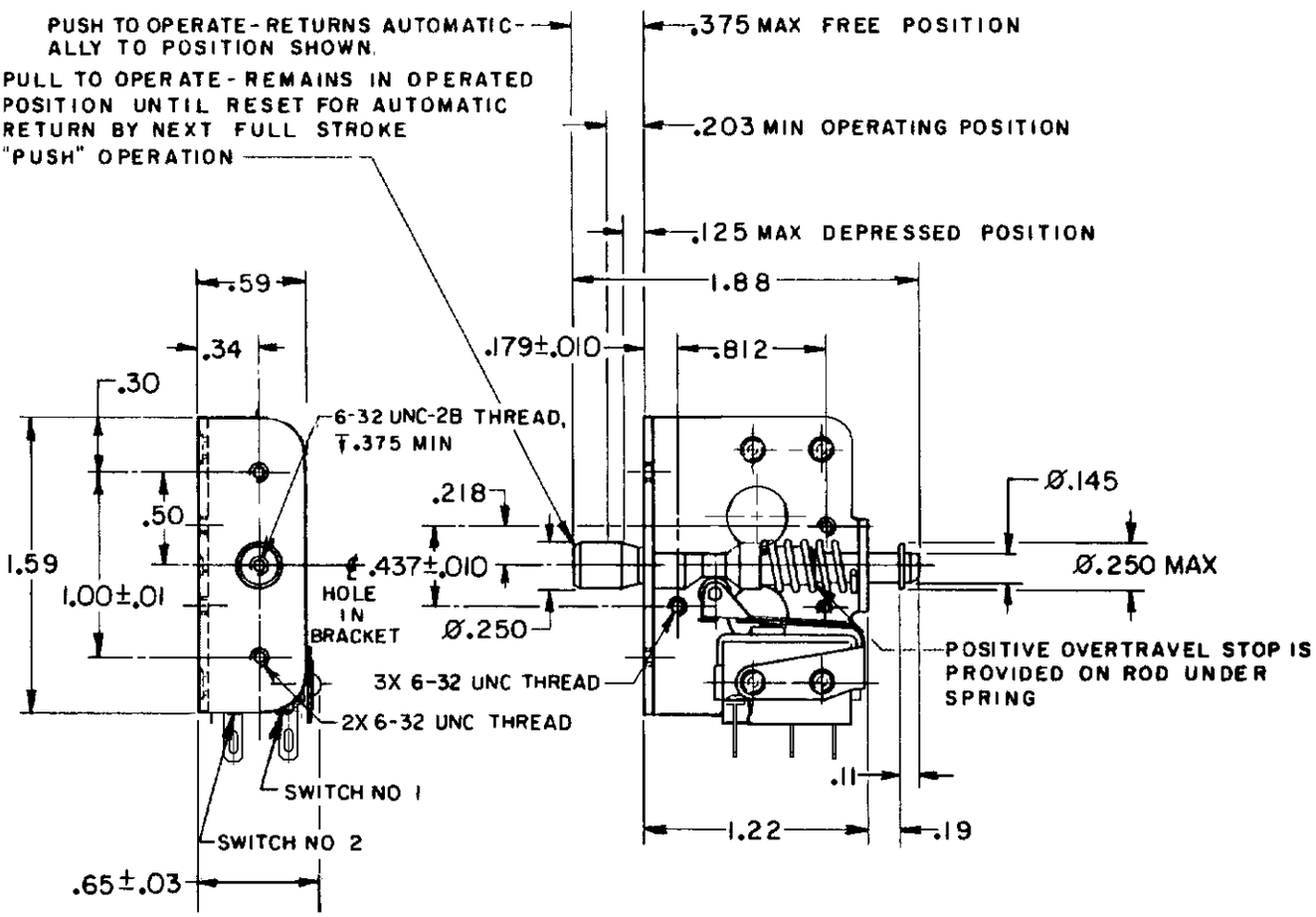

NOTES
1- UNIT INCLUDES CATALOG LISTING 22SM396-H4, 2X BASIC SWITCHES
2- SWITCHES DO NOT NECESSARILY OPERATE SIMULTANEOUSLY
3- NOTCH IN ACTUATOR ROD WILL PERMIT .035 DISPLACEMENT BETWEEN END OF ROD AND HOLE IN BRACKET
4- TERMINALS ARE PLATED FOR SOLDERING
5- ALL SWITCHES OPERATE ON PULL STROKE OF ACTUATING ROD

ANSI Y14.5M-1982 APPLIES

THIS DRAWING COVERS A PROPRIETARY ITEM AND IS THE PROPERTY OF MICRO SWITCH, A DIVISION OF HONEYWELL. THIS DRAWING IS NOT TO BE COPIED OR USED WITHOUT THE APPROVAL OF MICRO SWITCH.

THIRD ANGLE PROJECTION

CHARACTERISTICS	ELECTRICAL DATA	SCALE FULL / DO NOT SCALE PRINT
TOTAL TRAVEL .250 APPROX PUSH DIRECTION .188 APPROX PULL DIRECTION	CONTACT ARRANGEMENT 2X S P D T 30 VOLTS DC RATING INDUCTIVE ---- SEA LEVEL --- 3 AMP 50, 000 FT -- 2.5 AMP RESITIVE ----- SEA LEVEL --- 5 AMP 50,000FT ---- 5 AMP MAXIMUM INRUSH ---------- 24 AMP L151 5A 250 VAC, 30 VDC	UNLESS OTHERWISE SPECIFIED TOLERANCES ARE ONE PLACE (.0) ±.030 TWO PLACE (.00) ±.015 THREE PLACE (.000) ±.005 ANGLES ± WEIGHT

X111365-AC | REPLACES | RELEASE NO PR-23977 | CATALOG LISTING 8AC29-UL | PAGE 1 OF 1 | ISSUE 1 | CHECK | REVISIONS | CHECK | 1 APR 99 | CHECK J A F | 1 APR 99 | DRAWN G J W | FORMTEK