MICRO SWITCH
a Honeywell Division
FED.MFG.CODE 91929

ASSEMBLY- PUSHBUTTON SWITCH

CATALOG LISTING
8PA72-PB
JG-72360

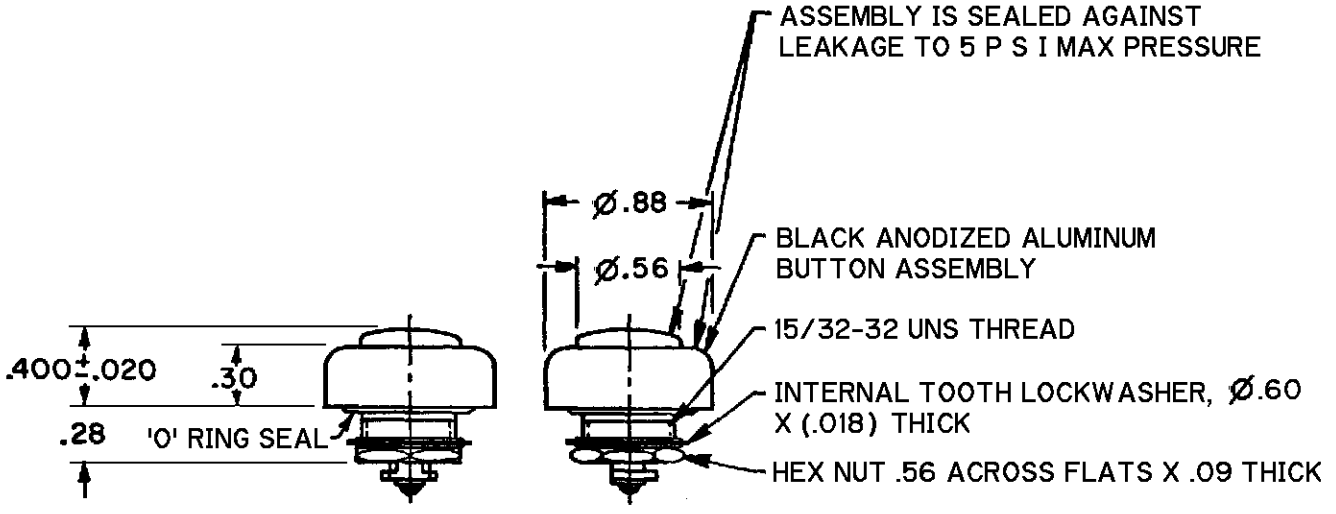

ANSI Y14.5M-1982 APPLIES

THIS DRAWING COVERS A PROPRIETARY ITEM AND IS THE PROPERTY OF MICRO SWITCH, A DIVISION OF HONEYWELL. THIS DRAWING IS NOT TO BE COPIED OR USED WITHOUT THE APPROVAL OF MICRO SWITCH.

THIRD ANGLE PROJECTION

CHARACTERISTICS	ELECTRICAL DATA	SCALE FULL	DO NOT SCALE PRINT
OPERATING FORCE - - - - - - 2 LB MAX	CONTACT ARRANGEMENT SPDT	UNLESS OTHERWISE SPECIFIED TOLERANCES ARE	
PLUNGER TRAVEL - - - - - - .062 APPROX		ONE PLACE (.0) ±.030	
		TWO PLACE (.00) ±.015	
		THREE PLACE (.000) ±.005	
		ANGLES ±	
		WEIGHT	

CATALOG LISTING 8PA72-PB
PAGE 1 OF 1
ISSUE 4

REVISIONS					
A	PR22855	TSM 29 JUL 97	B	C095143	DLT 15 JUL 99
C	0012472	CVS 11APR05			

REPLACES	RELEASE NO.	CHECK	CHECK	CHECK	CHECK	DRAWN
PR-10481	11 APR 05	AK	29 JUL 97	TSM	29 JUL 97	TSM

FORMTEK