MICRO SWITCH
a Honeywell Division
FED.MFG.CODE 91929

MINIATURE PRECISION LIMIT SWITCH

CATALOG LISTING
914CE18-12

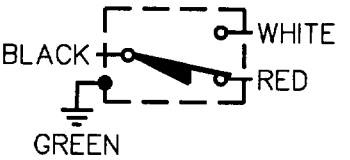

CIRCUIT DIAGRAM

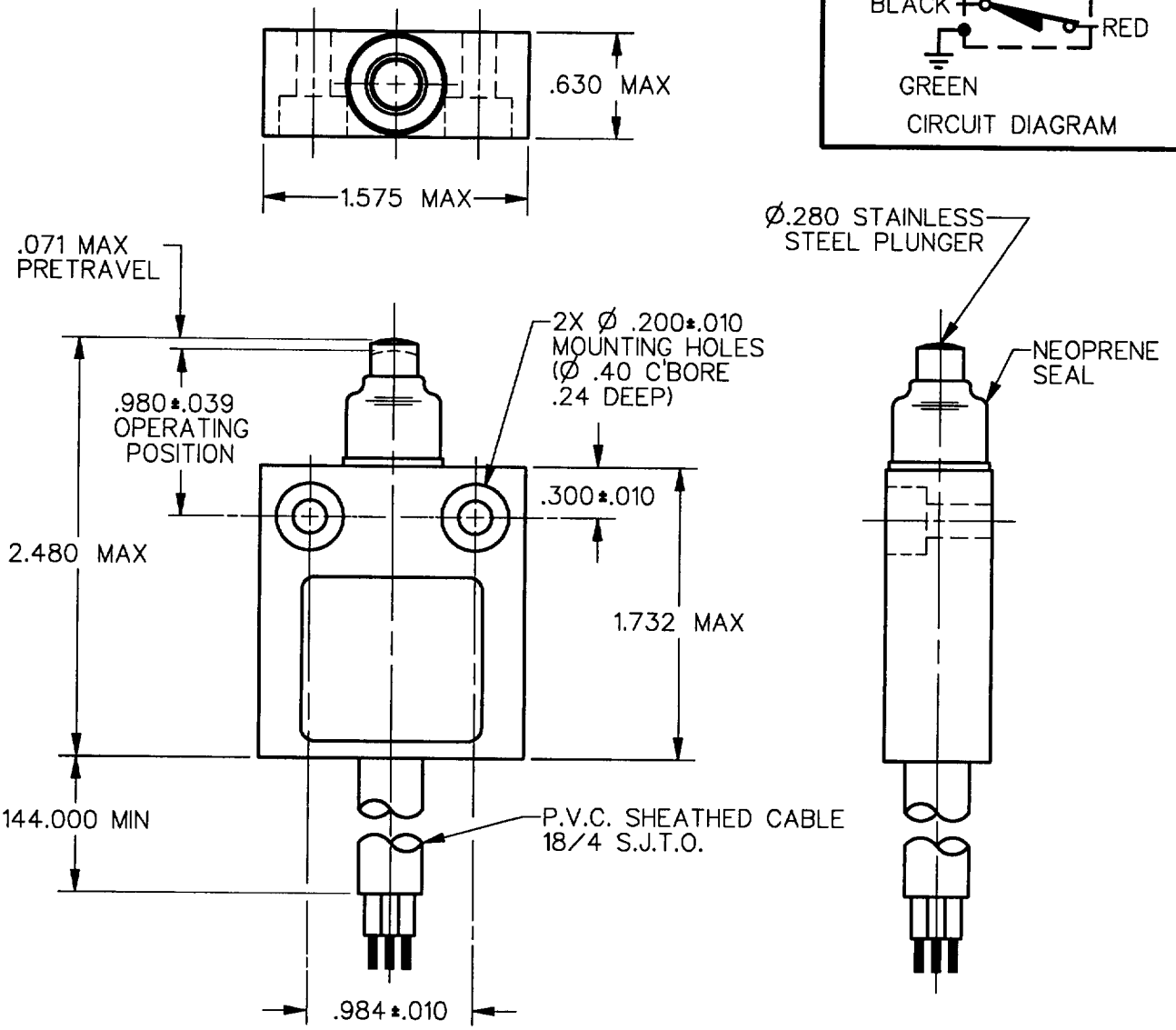

NOTES
1 – ZINC HOUSING FINISHED WITH GRAY PAINT

ANSI Y14.5M-1982 APPLIES

THIS DRAWING COVERS A PROPRIETARY ITEM AND IS THE PROPERTY OF MICRO SWITCH, A DIVISION OF HONEYWELL. THIS DRAWING IS NOT TO BE COPIED OR USED WITHOUT THE APPROVAL OF MICRO SWITCH.

THIRD ANGLE PROJECTION

CHARACTERISTICS	ELECTRICAL DATA	SCALE FULL — DO NOT SCALE PRINT
OPERATING FORCE — — — — 5 LB MAX	CONTACT ARRANGEMENT SPDT	UNLESS OTHERWISE SPECIFIED TOLERANCES ARE
DIFFERENTIAL TRAVEL — — — .004 MAX		ONE PLACE (.0) ±.030
OVERTRAVEL — — — — — — .118 MIN	5A 1/10HP 125 OR 250 VAC	TWO PLACE (.00) ±.015
		THREE PLACE (.000) ±.005
		ANGLES ±
		WEIGHT

914CE18-12 | M | DRAWING NUMBER | 2 | ISSUE | REPLACES | RELEASE NO. PR-17295 | CHECK | CHECK | DRAWN 14 NOV 91 | CHECK | SAV 4 OCT 91 | DRAWN DDM/CAD

REVISIONS
A CO-69061 SAV 4 OCT 91