MICRO SWITCH
a Honeywell Division
FED.MFG.CODE 91929

MINIATURE PRECISION LIMIT SWITCH

CATALOG LISTING
924CE1-Y3

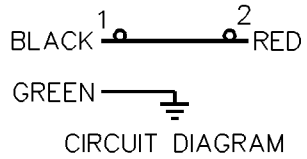

CIRCUIT DIAGRAM

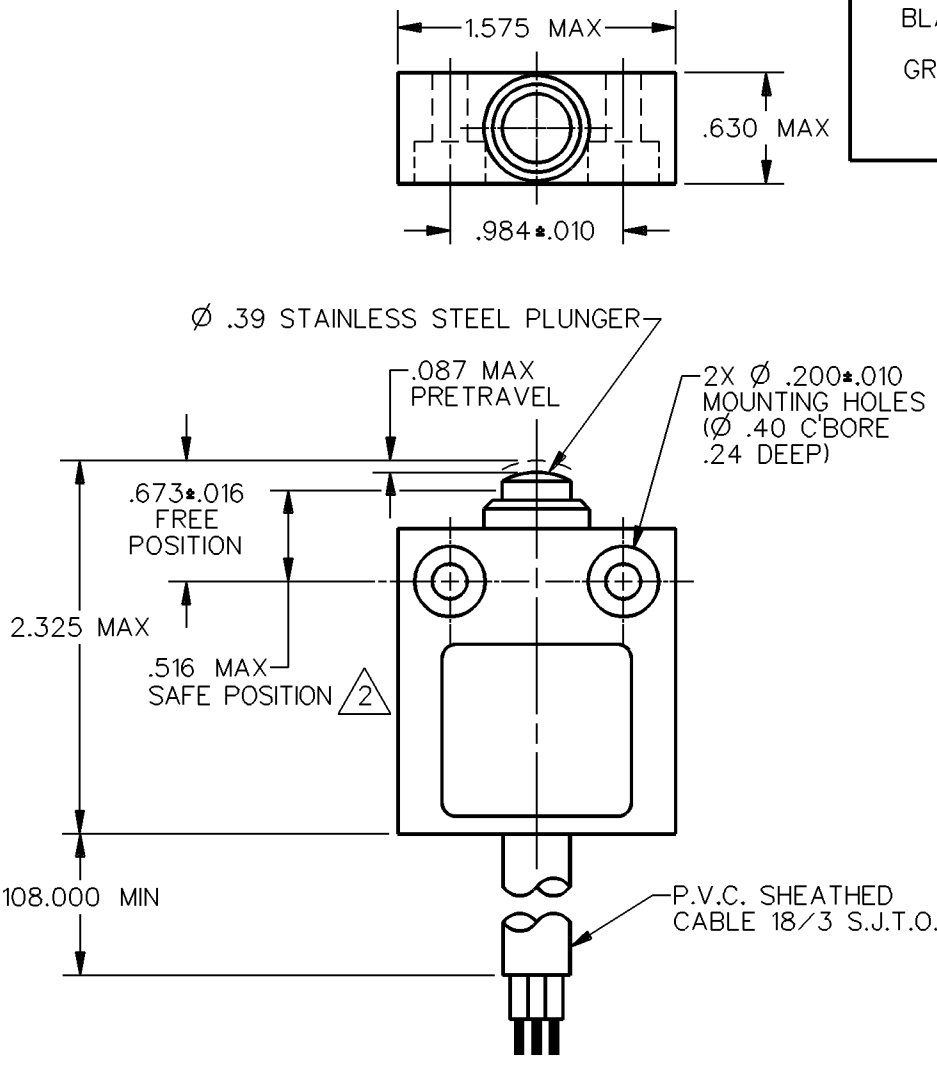

NOTES
1 – ZINC HOUSING FINISHED WITH GRAY PAINT
2 THE MINIMUM PLUNGER TRAVEL PAST BREAK, FOR A SAFE CONTACT GAP IS .060

ANSI Y14.5M–1982 APPLIES

THIS DRAWING COVERS A PROPRIETARY ITEM AND IS THE PROPERTY OF MICRO SWITCH, A DIVISION OF HONEYWELL. THIS DRAWING IS NOT TO BE COPIED OR USED WITHOUT THE APPROVAL OF MICRO SWITCH.

THIRD ANGLE PROJECTION

CHARACTERISTICS	ELECTRICAL DATA	SCALE FULL — DO NOT SCALE PRINT
OPERATING FORCE — — — 5.1 LB MAX	CONTACT ARRANGEMENT S P S T D B	UNLESS OTHERWISE SPECIFIED TOLERANCES ARE
	10A–250 VAC 1/3HP–125 OR 250 VAC	ONE PLACE (.0) ±.030 TWO PLACE (.00) ±.015 THREE PLACE (.000) ±.005 ANGLES ±
		WEIGHT

924CE1-Y3
RELEASE NO. PR-14729
REPLACES
DRAWING NUMBER
ISSUE 2
CHECK
REVISIONS
A CO-69061 S A V 29 AUG 91
CHECK
CHECK
DRAWN S A V 29 AUG 91
DDM/CAD