CODING					
FRONT VIEW HOUSING * CODING AERAS	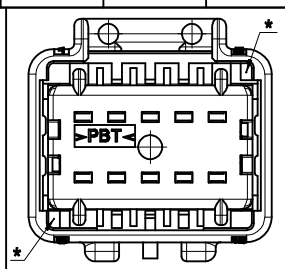	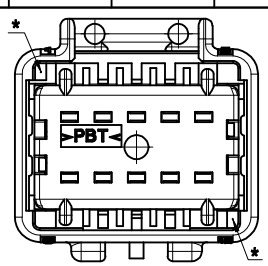	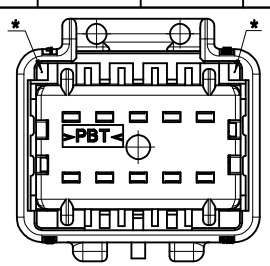	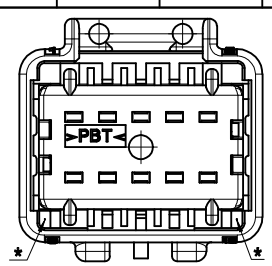	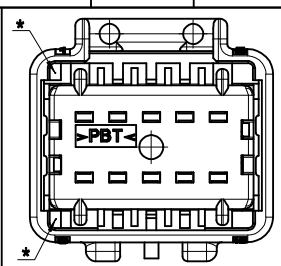
M/N	0988231018	0988231011	0988231016	0988231010	0988231015
COLOR	GREY	BLACK	BLUE	WHITE	GREEN

MODIFICATIONS

REV.	DESCRIPTIONS	NAME	DATE
A	X-RELEASED	PBO	06/12/18
B	DRAWING TITLE NSCC WAS UCCA + NEW TITLE BLOCK	GD	12/03/20
C	UPDATE MARKING PARTS	PGR	13/04/03

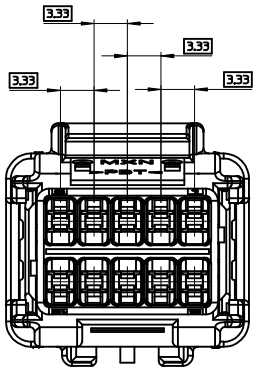

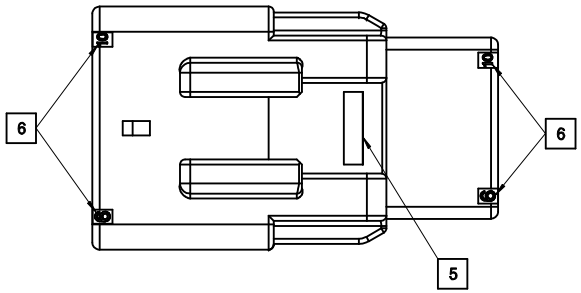

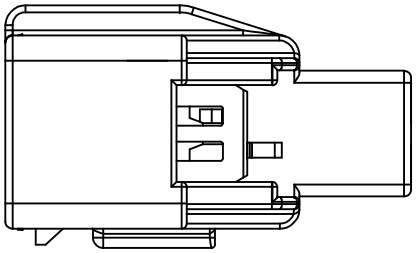

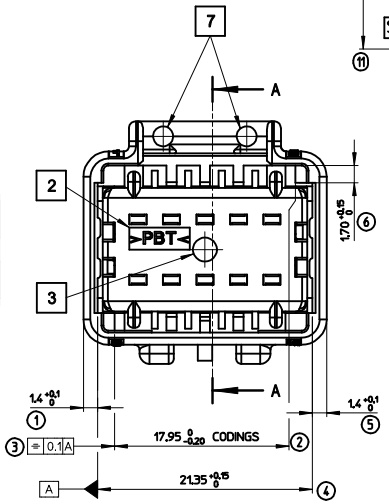

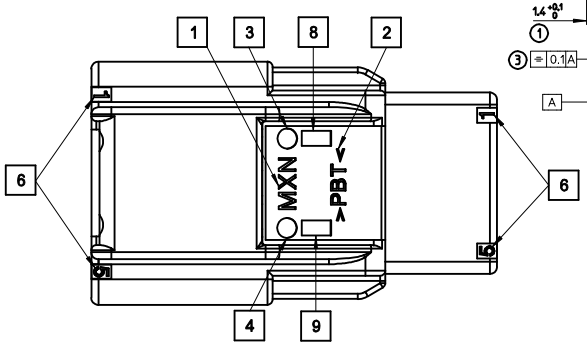

CODING SHOWN : 0988231018 GREY

ISO VIEW

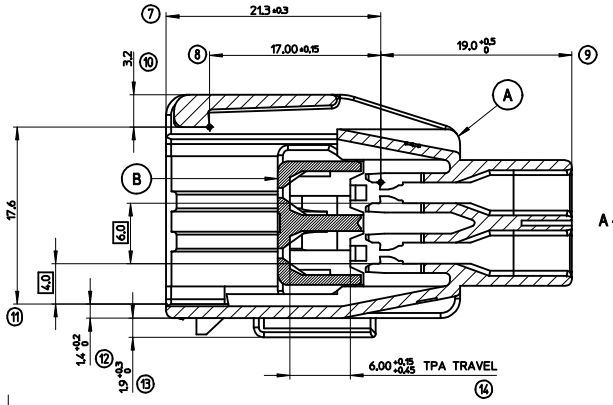

A - A

NOTES :

1 - USE 1,5 MM SICMA MALE TERMINALS
2 - MATES WITH 098816101X
3 - APPLICATION SPECIFICATION : AS-98816-001
4 - PART WEIGHT: 8.00 g

9	MOLD VERSION
8	PART REVISION LEVEL
7	DATUM YEAR / MONTH
6	CAVITY NUMBERING (FOR TERMINALS)
5	SUPPLIER P/N (#SERIE)
4	ASSEMBLY REVISION LEVEL
3	CAVITY MOLD N°
2	MATERIAL
1	SUPPLIER ACRONYM (INCLUDING MANUF. PLANT ID)
ID.	MARKING

ID.	QTY	DESIGNATION	M/N	COLOR	MATERIAL
B	1	SCC PIN CONN TPA 10CKT	0988230024	YELLOW	PBT
A	1	SCC PIN CONN UNSEALED 1,5 10CKT	0988231020	WHITE	PBT
			0988230011	BLACK	
			0988230015	GREEN	
			0988230016	BLUE	
			0988230018	GREY	

UPDATED MARKING PARTS
EC NO: G2013-0295 2013/04/03
DRWN:PGRANDCL 2013/04/03
CHKD:LBARRETO 2013/04/03
APPR:OPLESSIS 2013/04/05
REV C DESCRIPTION

GENERAL TOLERANCES (UNLESS SPECIFIED)

	mm	INCH
4 PLACES	± ---	± ---
3 PLACES	± ---	± ---
2 PLACES	± 0.05	± ---
1 PLACE	± 0.1	± ---
0 PLACE	±	±
ANGULAR	± 2 °	

DRAFT WHERE APPLICABLE MUST REMAIN WITHIN DIMENSIONS

DIMENSION STYLE: MM ONLY
SCALE: 4:1
DESIGN UNITS: METRIC
FIRST ANGLE PROJECTION

DRAWN BY: PBOSQUAIN DATE: 2006/12/18
CHECKED BY: JDUCLOS DATE: 2006/12/18
APPROVED BY: LSTICKEIR DATE: 2006/12/18

TITLE: NSCC PIN CONN UNSEALED 1,5 10CKT

molex

MATERIAL NO.: SEE CHART
DOCUMENT NO.: SD-98823-001
SHEET NO.: 1 OF 1
SIZE: A1

THIS DRAWING CONTAINS INFORMATION THAT IS PROPRIETARY TO MOLEX INCORPORATED AND SHOULD NOT BE USED WITHOUT WRITTEN PERMISSION