MICRO SWITCH
FREEPORT, ILLINOIS, U.S.A.
A DIVISION OF HONEYWELL
FED. MFG. CODE 91929

PACKET

CATALOG LISTING
9PA 24

THIS DRAWING COVERS A PROPRIETARY ITEM AND IS THE PROPERTY OF MICRO SWITCH. A DIVISION OF HONEYWELL. THIS DRAWING IS NOT TO BE COPIED OR USED WITHOUT THE APPROVAL OF MICRO SWITCH.

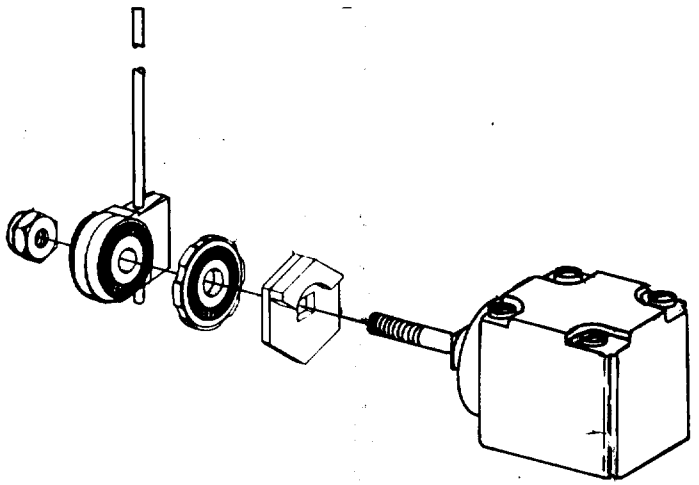

ADJUSTABLE TO OPERATE CLOCKWISE, COUNTER-CLOCKWISE, OR IN BOTH DIRECTIONS.

AS FACTORY ASSEMBLED THE SWITCH MAY BE ACTUATED BY CLOCKWISE MOVEMENT OF THE LEVER ARM ONLY

TO CONVERT SWITCH FOR ACTUATION IN THE COUNTER-CLOCKWISE DIRECTION ONLY, REMOVE THE HEAD AND SLIDE THE CAM TOWARD THE REAR OF THE HEAD SIFFICIENTLY TO DISENGAGE FROM THE FLATS ON THE SHAFT. ROTATE THE CAM 180° AND RE-ENGAGE THE CAM WITH THE FLATS ON THE SHAFT.

NOTE: WHEN SWITCH IS ADJUSTED FOR OPERATION IN ONE DIRECTION ONLY, THE ARM MAY BE MOVED TO THE FULL OVERTRAVEL POSITION IN THE OPPOSITE DIRECTION WITHOUT DAMAGING THE MECHANISM OR OPERATING THE SWITCH.

REPLACES	
RELEASE NO.	
DRAWING NUMBER	M 9PA24
ISSUE	4
CHECK	
REVISIONS	
A	CO 52194-D KAG 13 SEPT 83
B	CO54993 CJH 26 APR 84
CHECK	
CHECK	
DRAWN	K A G 13 SEPT 83

FO-52850