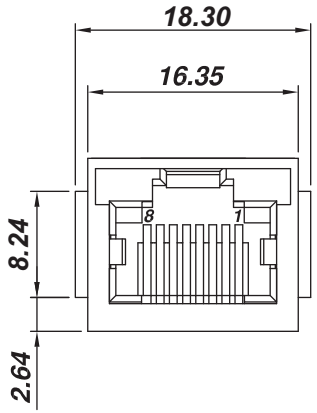

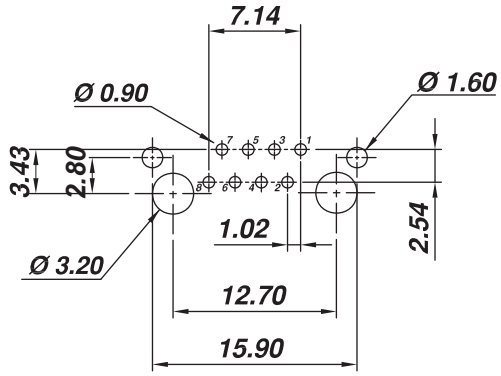

PC Layout
(Top View)

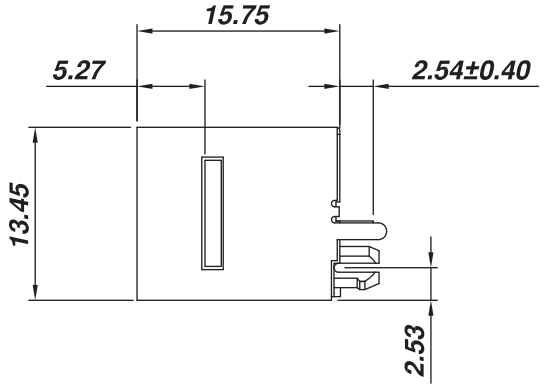

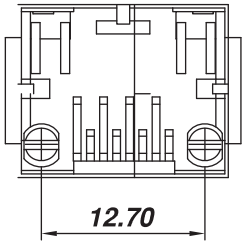

MM = ±0.25 (except Pin Lengths)

Pin Lengths MM = ±0.40

Materials:

- Insulator: Nylon, UL94V-0
  - Soldering Temperature: 260°C
- Spring Wire: 0.35MM Thickness Phosphor Bronze Gold Plating over Nickel
- Color: Black
- Shielded: Brass Plating Nickel

Electrical:

- Insulation Resistance: 500MΩ Min.
- Contact Resistance: 20MΩ Max.
- Rating Current: 1.5A Max.
- Rating Voltage: 120V AC
- Dielectric Withstanding: 1,000V AC at 1 Minute
- Operating Temperature: -40°C ~ +85°C
- Durability: 500 Mating cycles Min.

RoHS Complaint

Scale	1:1						Name	Item No. A-2014-2-1-LP/FS-R
TOLERANCE					Drawn	12.22.11	Chappell	
X.X	±0.40				Approved			Title RJ45, Top Entry, 180°, Shielded, 15μ", Flat Pin, Black
X.XX	±0.25							
X.XXX	±0.15							Drawing No. rev00
Angle	±3°							
			Modification	Date	Name			Replace / Sheet

ASSMANN WSW components