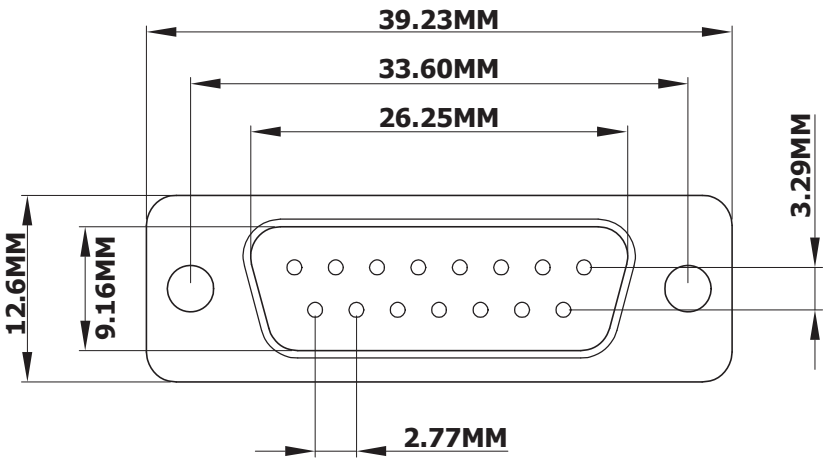

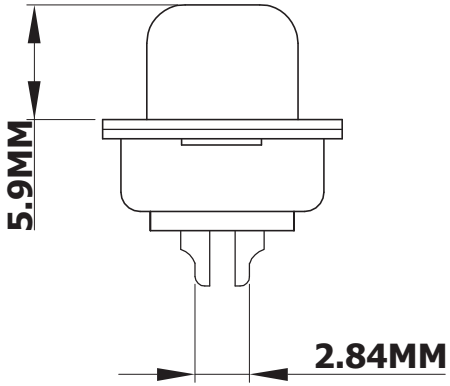

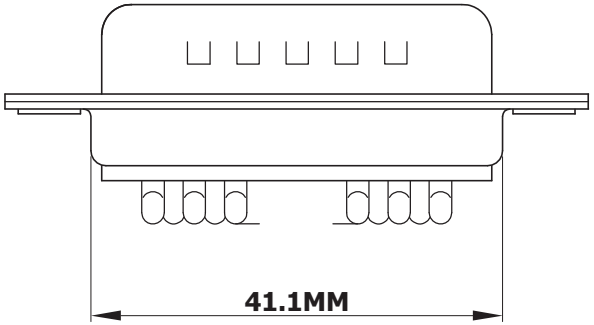

Material:

- Insulator: PBT, rated UL94V-0
- Contacts: Brass
- Shell: Steel
- Contact Plating: Gold Flash/Nickel

Electrical:

- Operation Voltage: 250V AC Max.
- Current Rating: 3 Amps Max.
- Contact Resistance: 15MΩ Max.
- Insulation Resistance: 3,000MΩ Min@500V DC
- Dielectric Withstanding Voltage: 1,000V AC/minute
- Operating Temperature: -55°C ~ +105°C

RoHS Complaint

Scale	1:1
TOLERANCE	
X.X	±0.40
X.XX	±0.25
X.XXX	±0.15
Angle	±3°

Modification	Date	Name

		Name
Drawn	11.16.11	Chappell
Approved		

ASSMANN WSW components

Item No.

A-DS15LL-TL-B-R

Title

D-Sub Stamped Connector, Male 15 Pin, Solder Cup w/o Treaded Inserts

Drawing No.

rev00

Replace

Sheet