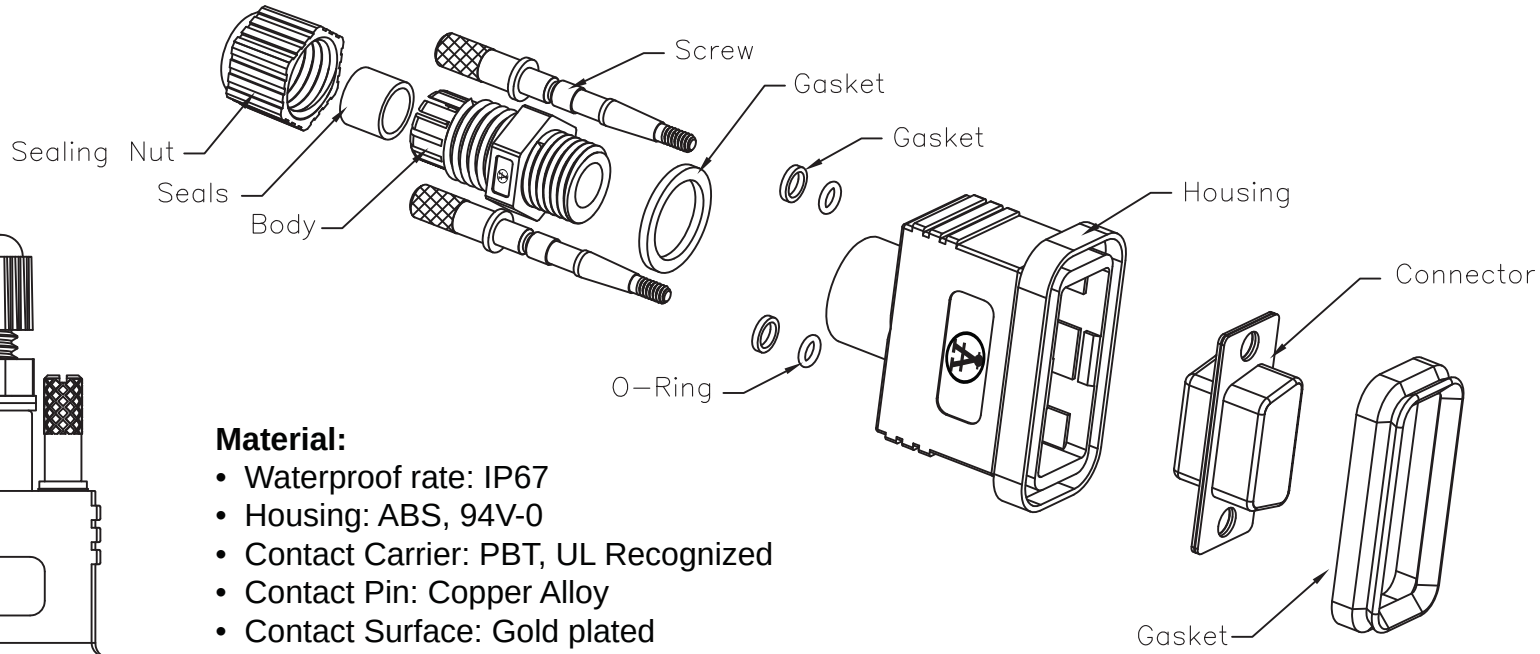

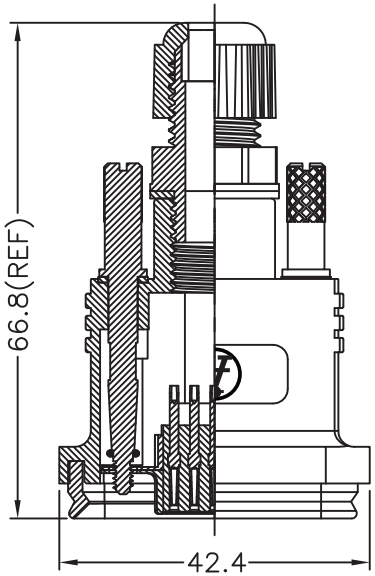

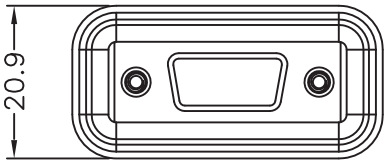

Conn.

Material:

- Waterproof rate: IP67
- Housing: ABS, 94V-0
- Contact Carrier: PBT, UL Recognized
- Contact Pin: Copper Alloy
- Contact Surface: Gold plated
- Screw: Brass, Nickel plated
- O-Ring: Silicone
- Clamp Ring: Nylon
- Temperature range: -20°C to 60°C
- Connector: D-SUB 9pin Female or Male Shielded (Solder pin)
- Seals: EPDM
- Seal Nut: Nylon
- Seals for cable: OD: ø3.5mm~ø7.0mm
- One set unassembled in one(1) PE bag

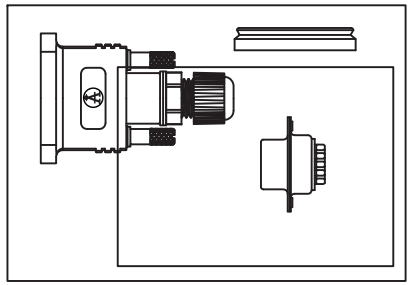

Unit: mm

RoHS Compliant

Scale	Free
TOLERANCE	
X.	±0.5
X.X	±X
X.XX	±X
DIM	TOL
X.°	±X°
X.X°	±X°
Angle	TOL

Id.	Modification	Date	Name
1	Updated all information	17.09.13	Wilson

	Date	Name
Drawn	08.03.13	Wilson
Approved	08.03.13	Groll

ASSMANN WSW components
1840 W. Drake Drive, Suite 101 • Tempe, AZ 85283
Toll Free: 1-877-277-6266 • Email: info@assmann.us

Title
D-Sub Waterproof Assembly type 9 pin Female or Male

ASSMANN WSW-No.
A-DF09-HOOD-WP (female)
A-DS09-HOOD-WP (male)

Drawing-No.

rev01

Replace

Sheet 1/1