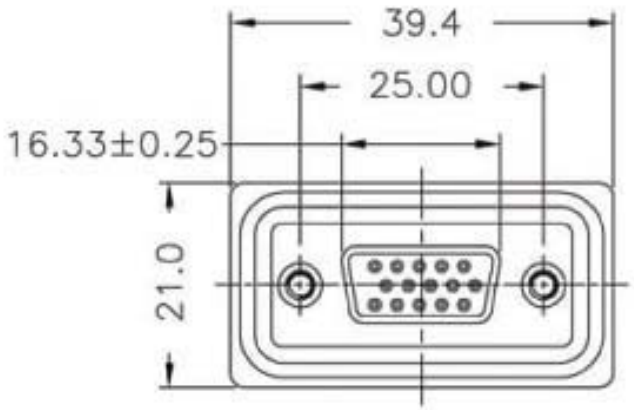

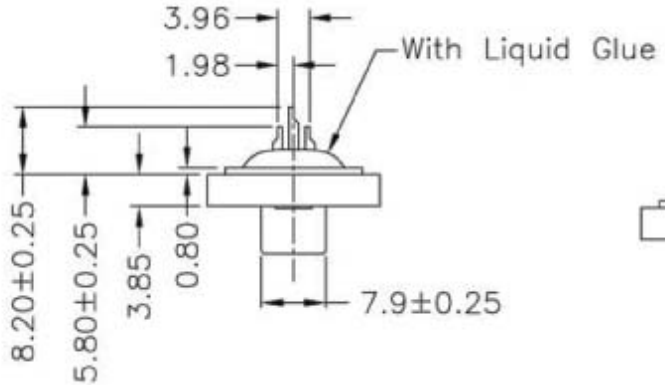

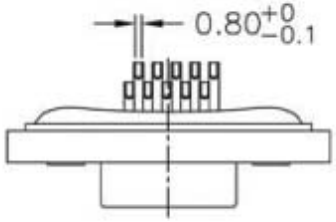

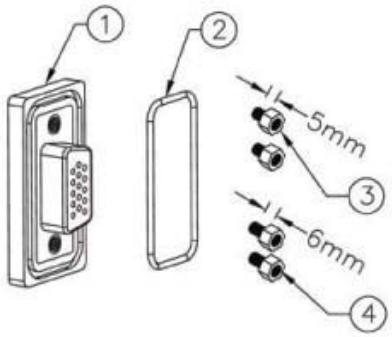

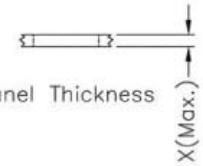

Screw L=5.0 For Panel Thickness Under 1.2mm

Screw L=6.0 For Panel Thickness Between 1.2~2.0mm

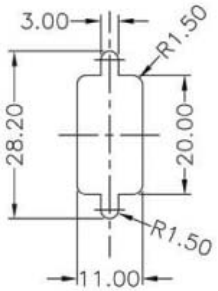

Recommended Panel Cut-Out

Material:

- Waterproof Rate: IP67
- Connector: Black, Nylon+GF
- Pin: Copper Alloy, Gold Plated
- Applicable Wire Range: 24AWG-28AWG

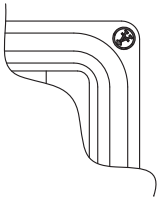

RoHS Complaint

Scale	1:1							Name
TOLERANCE						Drawn	11.28.11	Chappell
X.X	±0.40					Approved		
X.XX	±0.25							
X.XXX	±0.15							
Angle	±3°							
			Modification	Date	Name			

ASSMANN WSW components

Item No.

A-HDF15LL-WP-R

Title D-Sub, High Density, Female, 15 Pin, Solder Cup

Drawing No.

rev00

Replace

Sheet