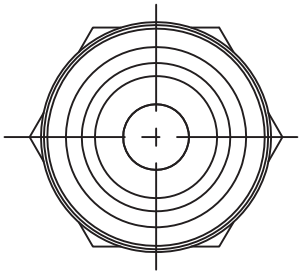

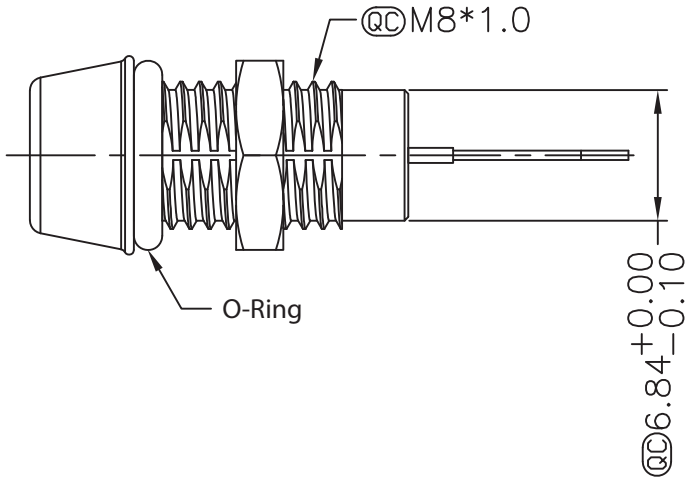

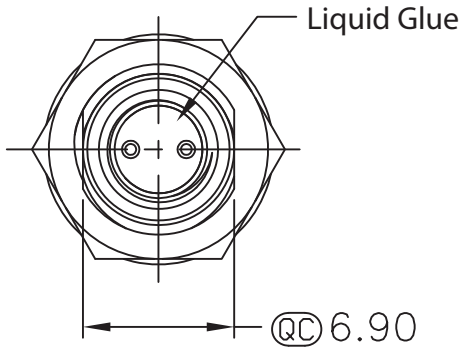

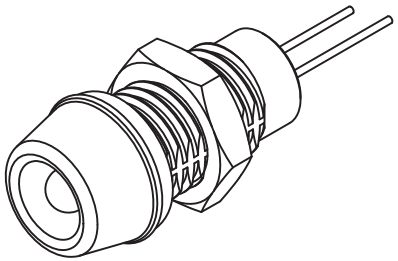

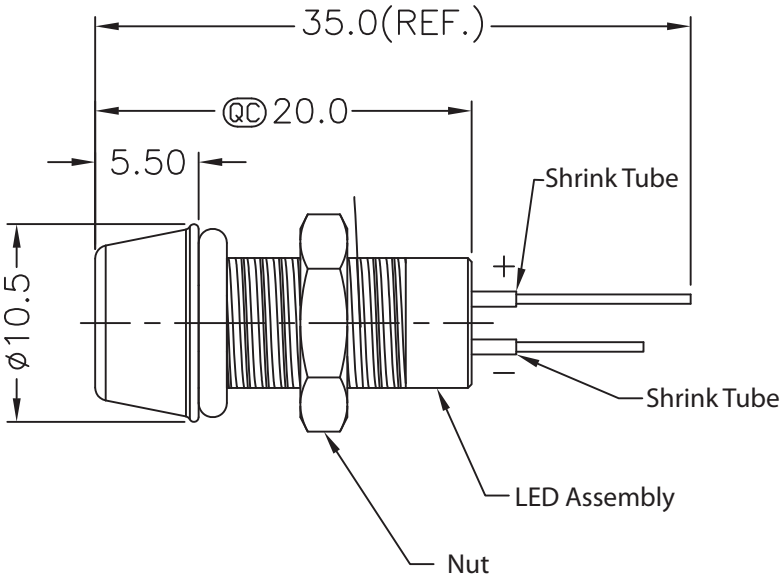

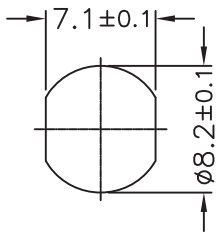

Recommended Panel Cut-Out

Material:

- Waterproof Rate: IP67
- LED Holder: Copper Alloy, Nickel plating
- LED: Ø3MM, Super Bright, Red/Green Bi-color LED
- Lens Color: Water Clear
- Forward Voltage: Red Typ. 2.05V/Max.2.5V
  Green Typ. 3.4V/Max.3.8V
- Forward Current: Red Typ. 35mA
  Green Typ. 20mA
- Luminous Intensity: Red Typ.1,000(Mcd)
  Green Typ.2,000(Mcd)
- Reverse Voltage: 5V DC
- O-ring: Silicone, Gray
- Operating Temperature: -30°C~+80°C
- For Panel Thickness 6.5MM Max.

Unit: MM±0.25MM

RoHS Complaint

Scale	1:1						Name
TOLERANCE							
X.X	±0.40				Drawn	11.07.11	Chappell
X.XX	±0.25				Approved		
X.XXX	±0.15						
Angle	±3°						
			Modification	Date	Name		

ASSMANN WSW components

Item No. **A-LED8-1AAAS-MR7-1-R**

Title Waterproof LED - Red/Green color, M8 size connector, Ø3MM, Metal housing, Solder Type, IP67 unmated

Drawing No. **rev00**

Replace | Sheet