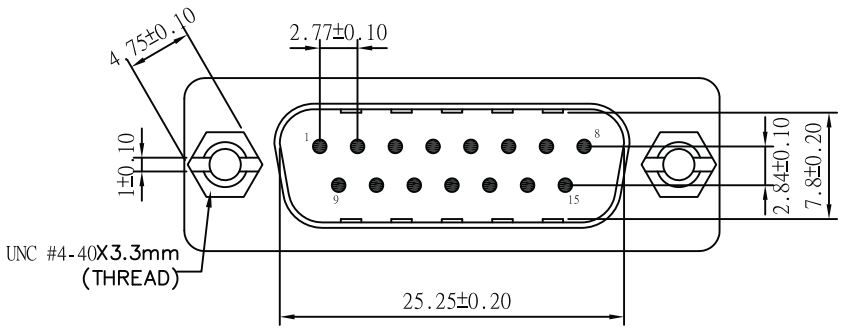

UNC #4-40 Hexscrew

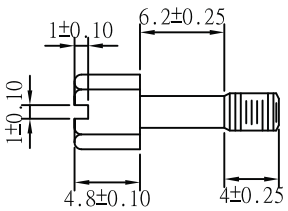

Pin Out

15P-Male	15P-Male
1	1
2	2
14	14
15	15
G	G

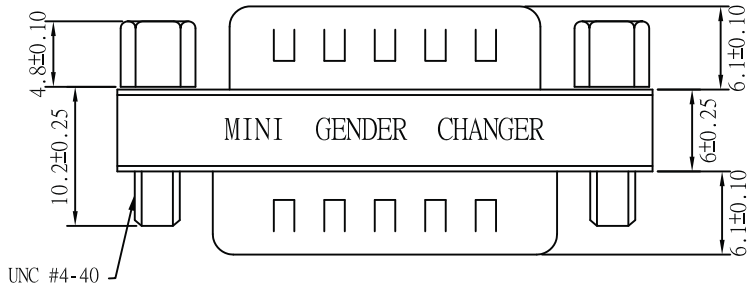

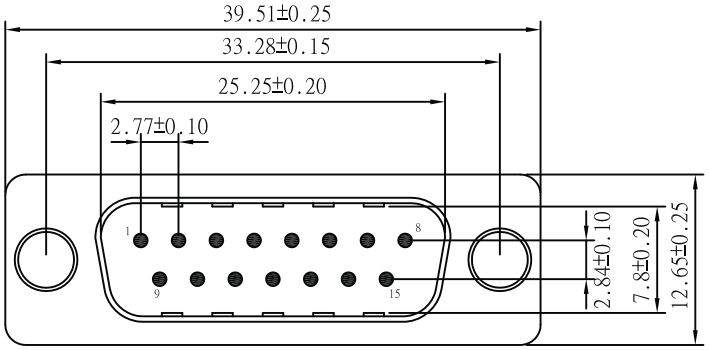

Material:

- Insulator: PBT Glass fibre reinforced UL 94 V0
- Contact: Brass
- Contact plating: Gold plated over nickel
- Shell: Tin plated shell
- Yellow label with black characters

Unit: MM

RoHS Complaint

Scale	1:1
TOLERANCE	
X.X	±0.40
X.XX	±0.25
X.XXX	±0.15
Angle	±3°

Modification	Date	Name

		Name
Drawn	11.22.11	Chappell
Approved		

ASSMANN WSW components

Item No.

AB412-R

Title

Mini Gender Changer -
D-Sub 15 Pin Male <=> D-Sub 15 Pin Male

Drawing No.

rev00

Replace

Sheet