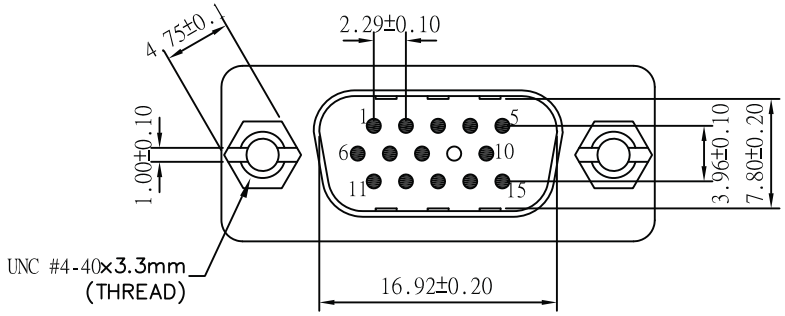

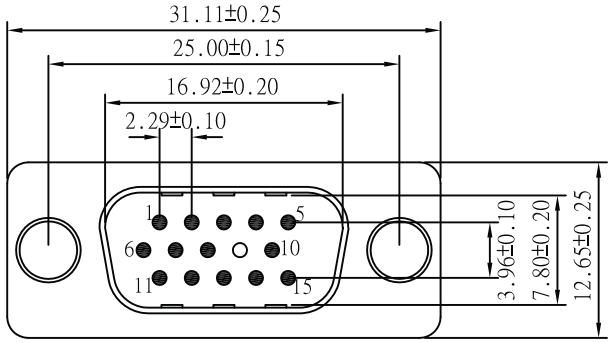

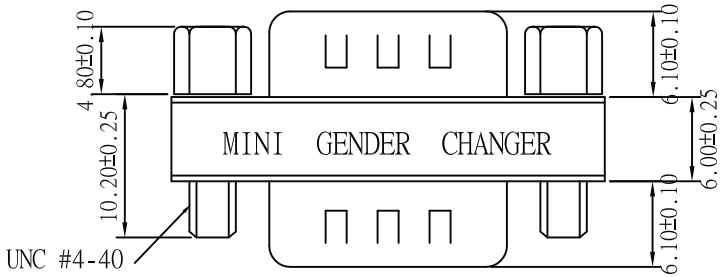

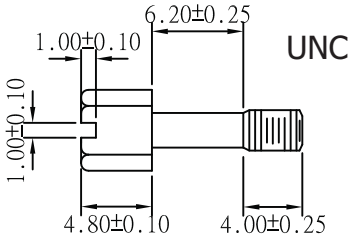

UNC #4-40 Hexscrew

Material:

- Insulator: PBT Glass fibre reinforced UL 94 V0
- Contact: Brass
- Contact plating: Gold plated over nickel
- Shell: Tin plated shell
- Yellow label with black characters

Unit: MM

Scale	1:1						Name	Item No. AB418-R
TOLERANCE						Drawn	11.22.11	Chappell
X.X	±0.40					Approved		Title: Mini Gender Changer - HD D-Sub 15 Pin Male <=> HD D-Sub 15 Pin Male
X.XX	±0.25							
X.XXX	±0.15							Drawing No. rev00
Angle	±3°							
			Modification	Date	Name			Replace / Sheet

RoHS Complaint

ASSMANN WSW components