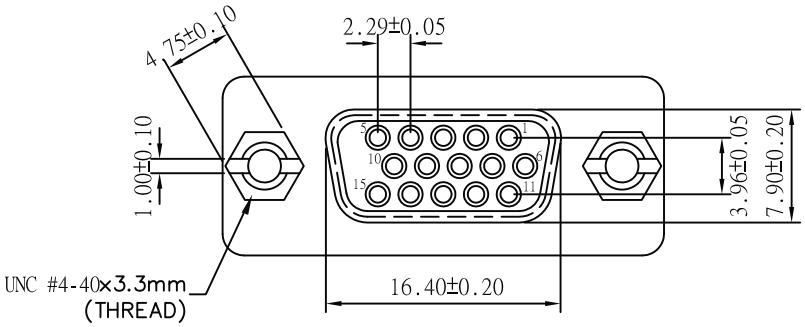

UNC #4-40 Hexscrew

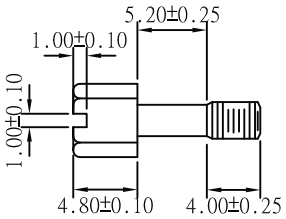

UNC #4-40 Hexnut

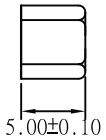

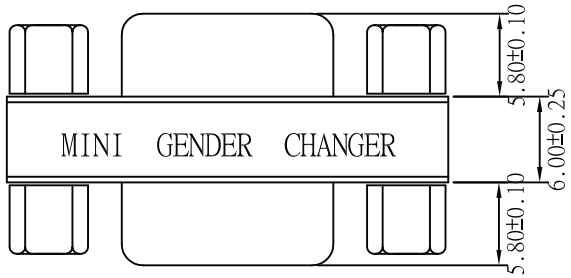

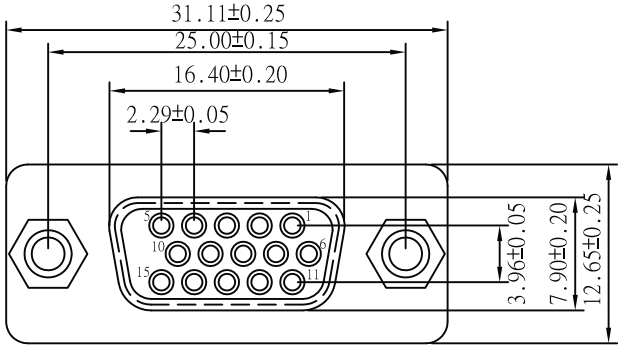

Pin Out

15P-Female	15P-Female
1	1
2	2
8	8
10	10
14	14
15	15
G	G

Material:

- Insulator: PBT Glass fibre reinforced UL 94 V0
- Contact: Brass
- Contact plating: Gold plated over nickel
- Shell: Tin plated shell
- Yellow label with black characters

Unit: MM

RoHS Complaint

Scale	1:1						Name
TOLERANCE							
X.X	±0.40				Drawn	11.22.11	Chappell
X.XX	±0.25				Approved		
X.XXX	±0.15						
Angle	±3°						
			Modification	Date	Name		

ASSMANN WSW components

Item No. **AB420-R**

Title Mini Gender Changer - HD D-Sub 15 Pin Female <=> HD D-Sub 15 Pin Female

Drawing No. **rev00**

Replace | Sheet