Video Decoder and Display Processor

Data Sheet

ADV7186

FEATURES

- 3D comb video decoder
- Overlay support for external graphical HMI/OSD
- Fastboot and bitmap load from external EEPROM
- LVDS transmitter and receiver (OpenLDI mapping)
- Hardware downscaling/upscaling to QVGA and WXGA panel resolutions
- Fully differential analog input
- LCD controller
- Qualified for automotive applications
- Video decoder
  - NTSC/PAL/SECAM color standards support
  - NTSC/PAL 2D/3D motion detecting comb filter
  - Advanced time-base correction (TBC) with frame synchronization
  - Vertical peaking and horizontal peaking filters
  - Robust synchronization extraction for poor video sources
  - Any-to-any, 3 × 3 color space conversion (CSC) matrix
- Video signal processor
  - Edge adaptive interlaced-to-progressive conversion of 525i and 625i
  - Bitmap overlay from EEPROM
  - Low cost bitmap overlay requiring no external memory
  - Hardware downscaling/upscaling to QVGA and WXGA panel resolutions
  - Adaptive contrast enhancement (ACE)
  - Up-dither of course resolution input signals
  - Vertical flip/horizontal mirror orientation control
- Analog input
  - Single low power 10-bit analog-to-digital converter (ADC)
  - 6-channel analog input mux
  - Single-ended or fully differential input
  - 3-channel antialiasing filter
  - 525i-/525p-/625i-/625p-/720p-/1080i-component analog input
  - RGB graphics up to 800 × 600 at 60 Hz (SVGA)
- Digital input
  - Flexible 24-bit pixel input interface
  - LVDS receiver (OpenLDI mapping)
- Digital output
  - Flexible 24-bit pixel output interface
  - LVDS transmitter (OpenLDI mapping)
  - Independent BT.656 output channel
- LCD controller
  - Timing controller (TCON) for LCD panels PWM backlight control
  - Programmable gamma correction
- General
  - Dual standard identification (STDI) function support
  - 1 programmable interrupt request output pin
  - Spread spectrum output pixel clock
  - Support for low power mobile DDR (LPDDR) and DDR2 SDRAM
  - LVDS Rx and Tx available on ADV7186BBCZ only
  - TCON available on ADV7186BBCZ-T and ADV7186BBCZ-TL

APPLICATIONS

- Navigation radios and infotainment head units
- Central console and rear seat monitors
- Parking guide and ADAS vision systems
- Pico and mini projectors
- Industrial monitors and displays

FUNCTIONAL BLOCK DIAGRAM

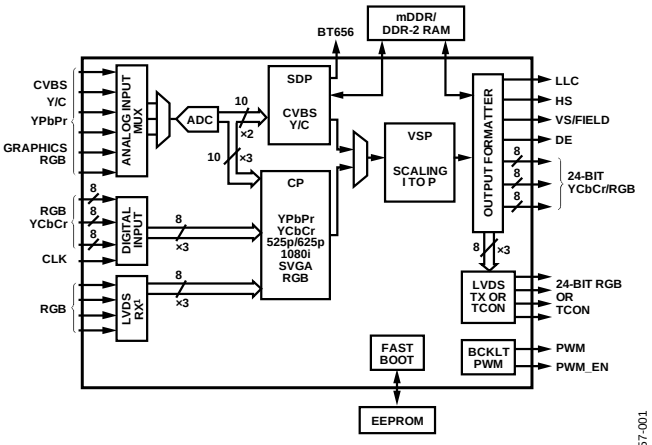

[1]NOT AVAILABLE ON THE ADV7186-T OR THE ADV7186-TL.

Figure 1.

For more information about the ADV7186, including the complete data sheet, contact your local Analog Devices, Inc., sales office at www.analog.com/sales.

Rev. SpB

Document Feedback

Information furnished by Analog Devices is believed to be accurate and reliable. However, no responsibility is assumed by Analog Devices for its use, nor for any infringements of patents or other rights of third parties that may result from its use. Specifications subject to change without notice. No license is granted by implication or otherwise under any patent or patent rights of Analog Devices. Trademarks and registered trademarks are the property of their respective owners.

One Technology Way, P.O. Box 9106, Norwood, MA 02062-9106, U.S.A.
Tel: 781.329.4700 ©2012–2013 Analog Devices, Inc. All rights reserved.

Technical Support www.analog.com

NOTES

©2012–2013 Analog Devices, Inc. All rights reserved. Trademarks and registered trademarks are the property of their respective owners.
D10557F-0-10/13(SpB)