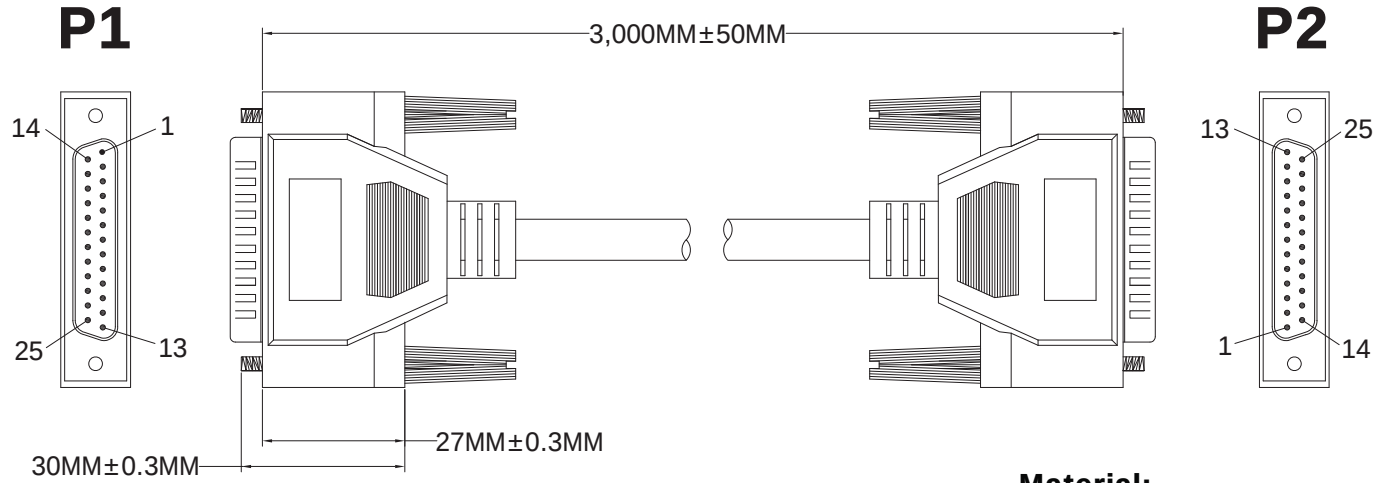

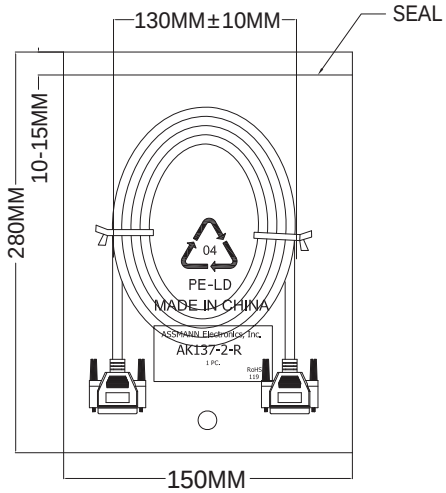

*Pin Assignment 1:1

Material:

- Cable: NOUL 28AWG*25C+D+AL/MY
  - OD: 6.5MM
  - Color: Beige
- Connectors: DB 25 Pin Soder Type
  - Pin G/F
  - Shell: Ni-Plated
  - Insulator Color: Blue
- Inner Jacket: Clear LD-PE
- Outer Jacket: PVC 40P (Beige)
- Screw: #4-40UNC Type, Nickel Plated

Electrical:

- 100% Open short & mis wire test
- Contact Resistance: 5Ω Max.
- Insulation Resistance: 10Ω Min.
- Hi-Pot: 300V DC / 10MS

Unit: mm

RoHS Compliant

Scale	Free
TOLERANCE	
X.X	±0.40
X.XX	±0.25
X.XXX	±0.15
DIM	TOL
X.°	±3°
X.X°	±X°
Angle	TOL

Id.	Modification	Date	Name

	Date	Name
Drawn	14.11.11	Chappell
Approved		

ASSMANN WSW components
1840 W. Drake Drive, Suite 101 • Tempe, AZ 85283
Toll Free: 1-877-277-6266 • Email: info@assmann.us

Title
Serial/Parallel connection cable
25 pin male ⇔25 pin male, 3 meters

ASSMANN WSW-No.
AK162-3-R

Drawing-No.

rev00

Replace

Sheet
1/1