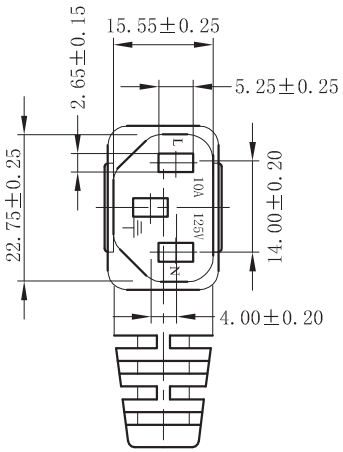

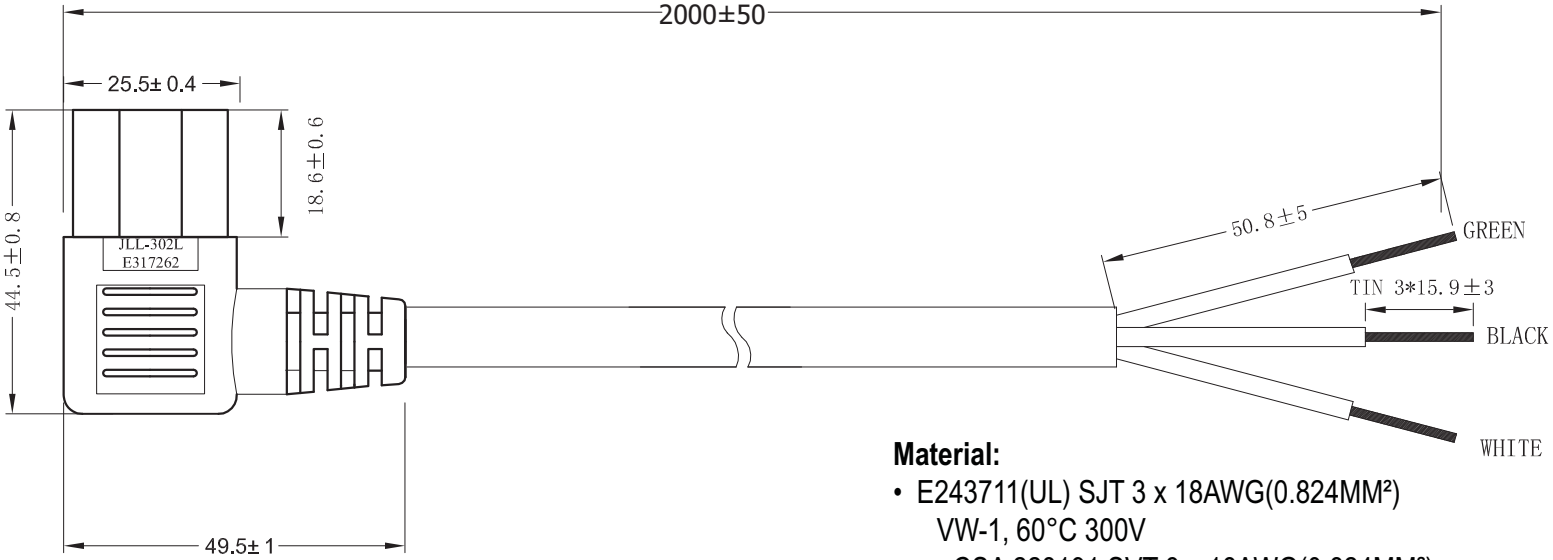

Material:

- E243711(UL) SJT 3 x 18AWG(0.824MM²)
  VW-1, 60°C 300V
  - CSA 228191 SVT 3 x 18AWG(0.824MM²)
  FT2 60°C 300V -LF-
- Jacket Color: Black
- E - Green; L - Black; N - White

Electrical:

- 100% Open & Short Testing
- Insulation Resistance: 100MΩ (Min.)
- Voltage: 500V DC / 1 Min

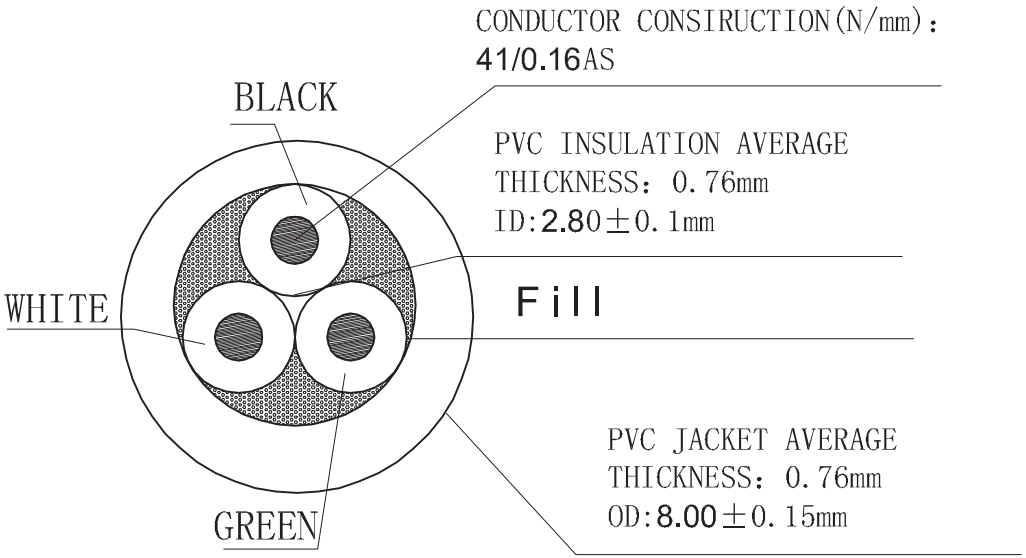

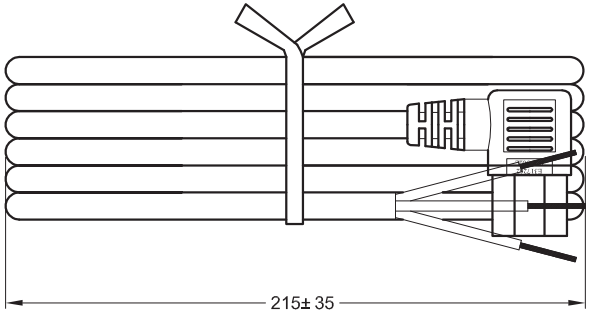

Unit: MM

RoHS Compliant

ITEM NO.

AK500-RA-7-2-R

TITLE Power Cord - SJT Right Angle/Open End, Unshielded, 60°C, 18AWG, 2 Meters

ASSMANN Electronics, Inc.
1840 W. Drake Drive, Suite 101 • Tempe, AZ 85283
Toll Free: 1-877-277-6266 • Email: info@usa-assmann.com

THIS DRAWING IS UNPUBLISHED
©Copyright 2011 by Assmann Electronic Components
All International Rights Reserved