Material:

- SVT 3x18AWG(0.824MM^2) VW-1 60° 300V
- Jacket Color: Black
- E- Green; L- Black; N- White

Electrical Test：

. 100% Open & Short Testing
. Insulation Resistance ：100meg-ohm(Min.)
. Voltage：500V DC / 1 Min.

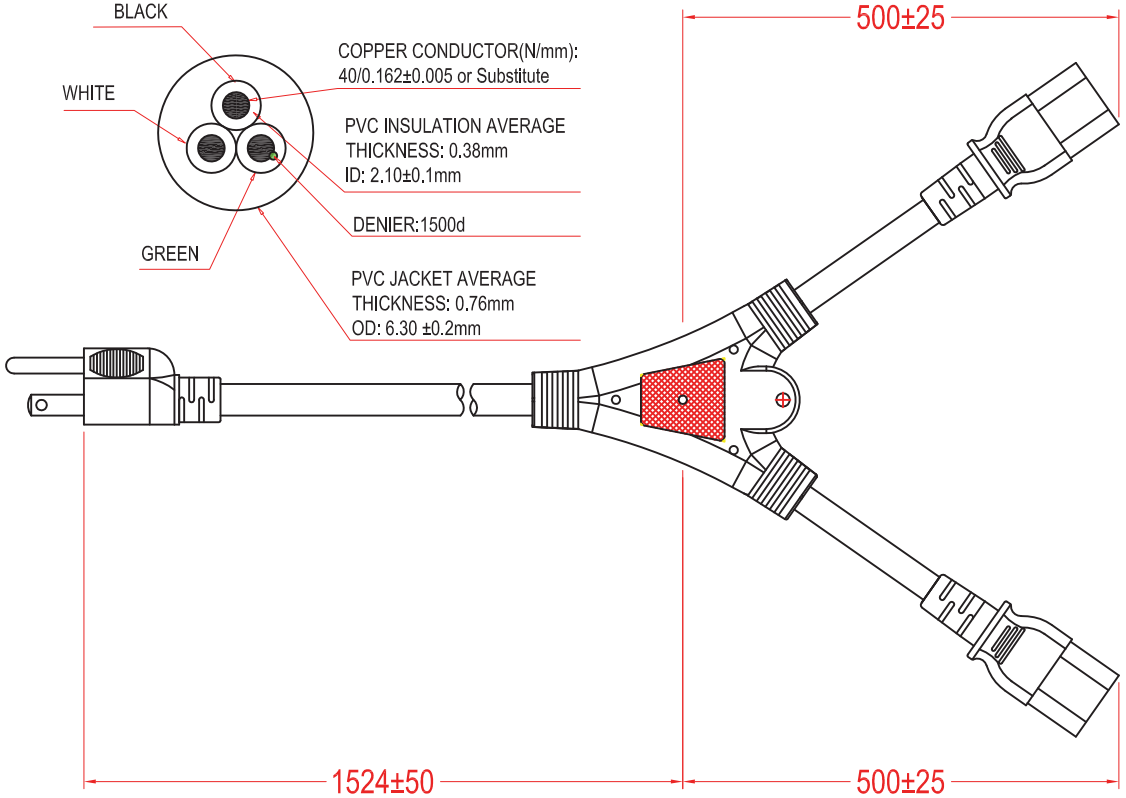

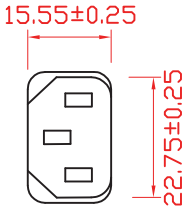

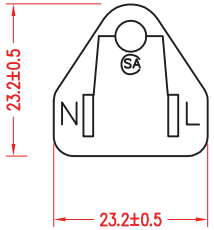

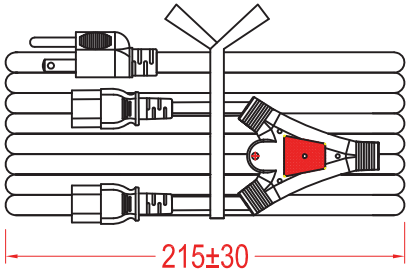

Power Cord IEC Extension-SVT Unshileded, 60°C, 18AWG, 2 Meters

Unit: mm

RoHS Compliant

Scale	Free
TOLERANCE	
X.	±X
X.X	±X
X.XX	±X
DIM	TOL
X.°	±X°
X.X°	±X°
Angle	TOL

Id.	Modification	Date	Name
1	Updated all information	25.06.13	Wilson

	Date	Name
Drawn	27.11.11	Chappell
Approved	25.06.13	Groll

ASSMANN WSW components
1840 W. Drake Drive, Suite 101 • Tempe, AZ 85283
Toll Free: 1-877-277-6266 • Email: info@assmann.us

Title
Y-Power cord - Plug ⇔ IEC connector(x2)
SVT, 18AWG, 60°C, Unshielded, 2M

ASSMANN WSW-No.
AK500/Y-U-R

Drawing-No.

rev01

Replace

Sheet 1/1