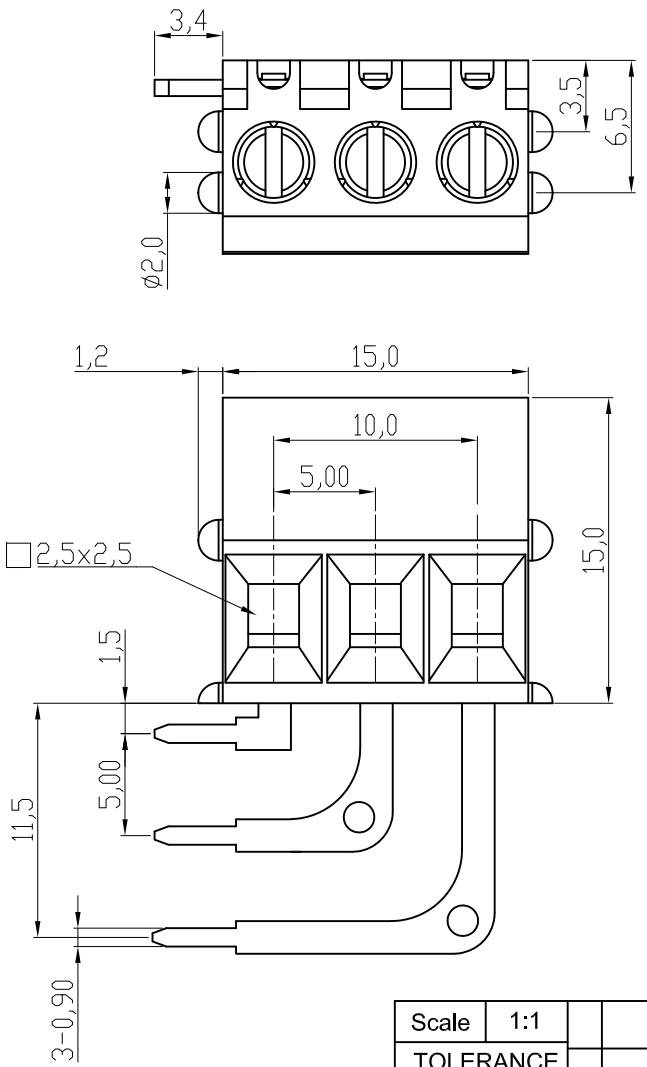

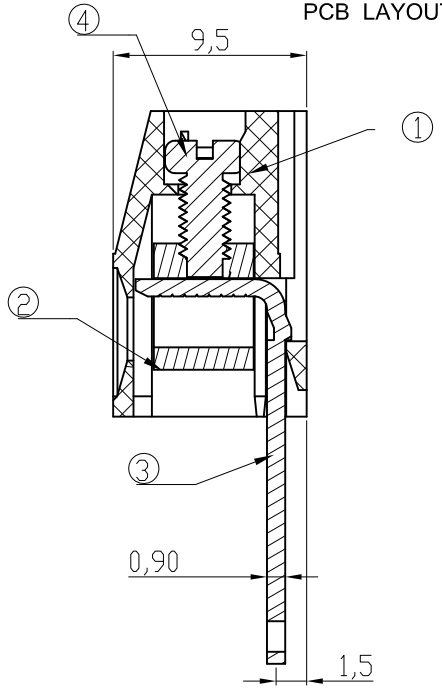

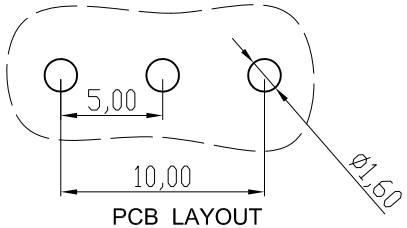

PCB LAYOUT

Material

Item 1 : Terminal housing:Thermoplastic (UL94V-0),Grey
Item 2 : Clamp: Brass , Ni plated
Item 3 : Wire guard solder pin: Brass,Tin plated
Item 4 : Terminal screw: Steel Zinc plating "-" slot type

Electrical

Voltage rating: 300V
Current rating: 10A
Wire range:
Solid wire(AWG): 12-22
Stranded wire(AWG): 12-22
Torque(Lb-In): 3.5
Screw: M2.5
Wire strip length: 6-7mm
Withstanding Voltage: 1.6KV
Operating temperature: -40°C to +115°C
Soldering temperature: 250°C±10°C/5 Sec

RoHS compliant

Scale	1:1						Date	Name
TOLERANCE						Drawn	06.12.2006	Alex
X.	±0.50					Approved	20.04.2010	Hellwig
X.X	±0.30							
X.XX	±0.10							
DIM	TOL	①	Update	20.04.2010	Alex			
X.°	±1°	⓪	Drawn	06.12.2006	Hellwig			
Angle	TOL	Id.	Modification	Date	Name			

Customer-No.

ASSMANN WSW-No.
A-TB500-V303L

Drawing-No.
ASS 0653A CO

rev00

Replace

Sheet

ASSMANN WSW components