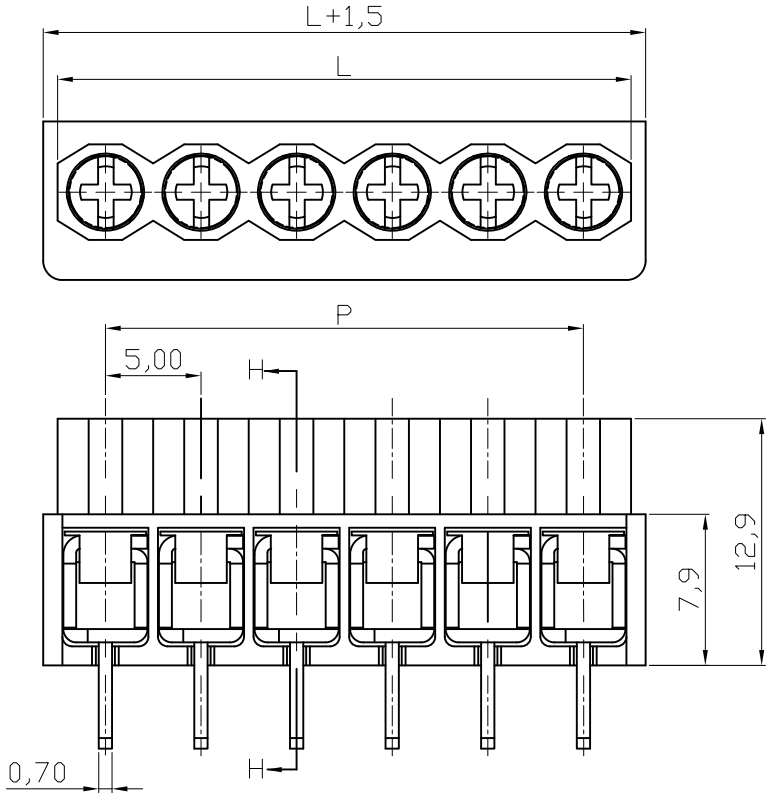

N=Number of poles

L=Nx5.0

P=(N-1)x5.0

TOL

POLES	L	P
2p-6p	±0.20	±0.15
7p-12p	±0.25	±0.20
13p-18p	±0.30	±0.25
19p-24p	±0.40	±0.30

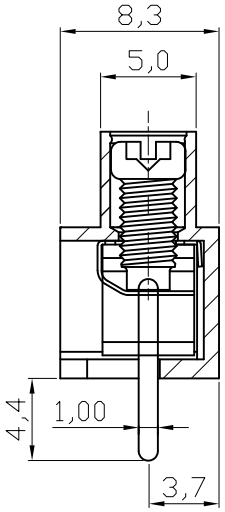

SECTION H-H

Material

Terminal body
(metal housing): Brass stamped
Terminal screw: Steel Zinc plating "+/-" slot type
Wire guard: Stainless steel
Surface of solder tail: Tin plated
Insulator (housing): Thermoplastic (UL94V-0) ,Green

Electrical cULus/VDE

Voltage rating: 300VAC/450VAC
Current rating: 10A/17.5
Wire range: 0.75-4.0mm²
Solid wire(AWG): 12-20
Stranded wire(AWG): 12-20
Torque(Lb-In): 3.5Lb-In/0.4Nm
Screw: M3
Wire strip length: 6-7mm
Withstanding Voltage: 1.6KV/2.5KV
Operating temperature: -40°C to +115°C
Soldering temperature: 250°C±10°C/5 Sec
Safety Approval: c us VDE

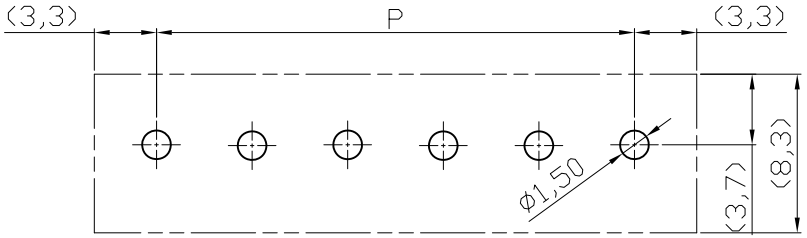

P.C.B. LAYOUT

RoHS compliant

Scale	1:1
TOLERANCE	
X.	±0.50
X.X	±0.30
X.XX	±0.10
DIM	TOL
X.°	±1°
X.X°	±X°
Angle	TOL

Id.	Modification	Date	Name
②	Update	19.04.2010	Dean
①	Drawn	23.08.2004	Hellwig

	Date	Name
Drawn	23.08.2004	Hellwig
Approved	19.04.2010	Hellwig

ASSMANN WSW components

Customer-No.

ASSMANN WSW-No.
A-TB500-T4xxSB

Drawing-No.
ASS 0738 CO

rev02

Replace

Sheet