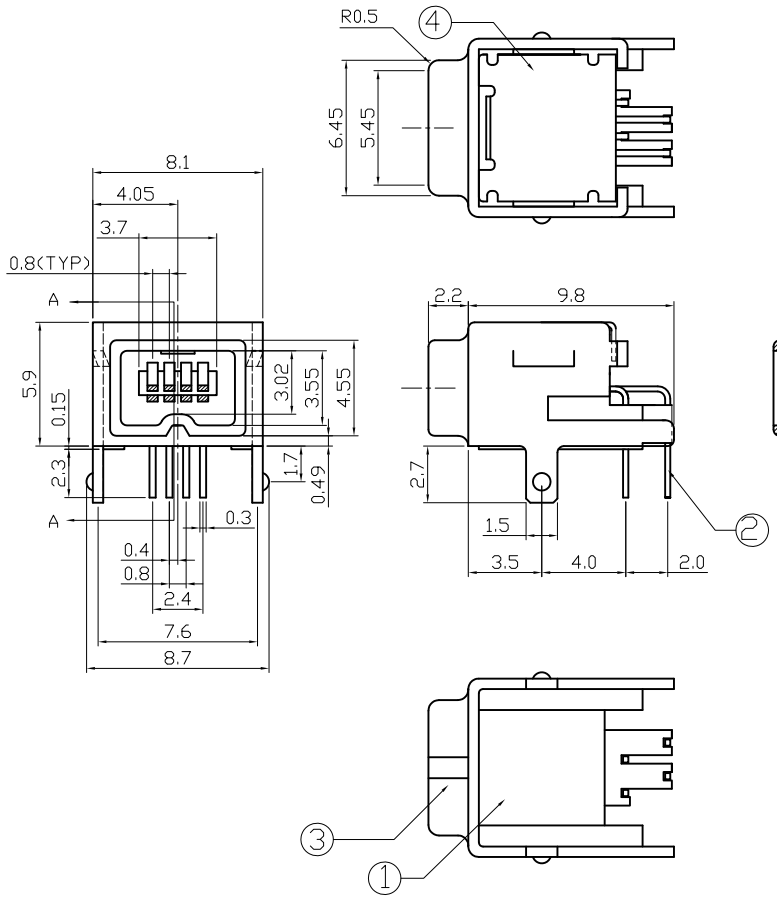

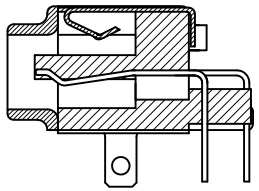

SECTION A-A

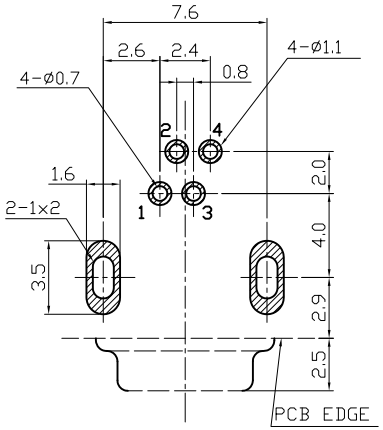

COMPONENT SIDE
PCB LAYOUT

Specification:
Contact Resistance: 30m Ohm Max.
Insulation Resistance: 100M Ohm Min.
Voltage - Max;40V Maximum
Current - Max:1.5A Maximum.
Dielectric Withstanding Voltage:
500V AC for 1 Minute
Durability (Life Test): 1500 Cycles
Unmating Force:9.8 Newtone TO
39.2 Newtone Maximum.

No.	NAME	MATERIAL	FINISH	REMARK	Q'TY
1	HOUSING	NYLON PA9T G.F.	BLACK		1
2	PIN TERM.	PHOS.BRONZE t:0.25mm	GOLD-TIN PLATED	Gold:30 u" ; Ni:40~60 u" ; TIN:120u" (100% pure TIn of lead free platlng)	4
3	FRONT SHELL	STEEL t:0.5mm	NICKEL PLATED	Ni:2~3u	1
4	REAR SHELL	BRASS t:0.2mm	NICKEL PLATED	Ni:2~3u	1

RoHS compliant

Scale	1:1
TOLERANCE	
X.	±0.38
X.X	±0.25
X.XX	±0.13
X°	±3°
.X°	±1.0°

Id.	Modification	Date	Name
2	Update	28.08.2009	Dean
1	Drawn	03.07.2003	Hellwig

	Date	Name
Drawn	03.07.2003	Hellwig
Approved	28.08.2009	Hellwig

Customer-No.

ASSMANN WSW-No. A-IEE-M4P

Drawing-No. ASS 1457 CO

rev02

Replace

Sheet