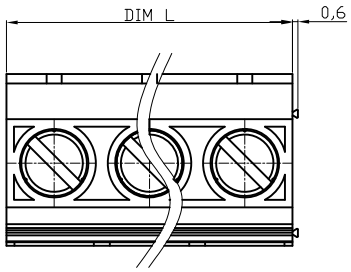

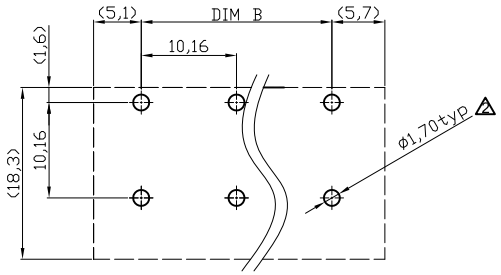

Recommended PCB Layout

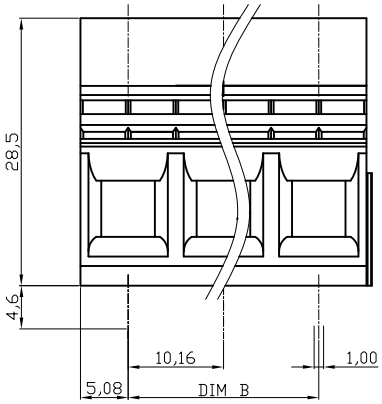

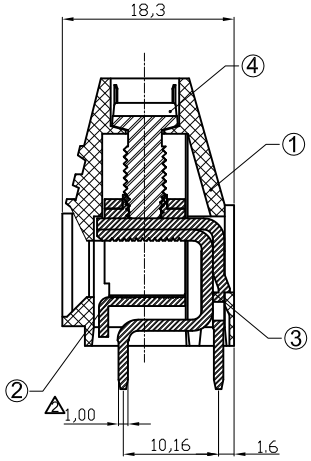

NOTES:

MATERIAL
1.Item ① Insulator (housing):Thermoplastic (UL 94V-0),Grey
2.Item ② Metal housing:Steel stamping
3.Item ③ Contacts : Brass
4.Item ④ Terminal screw:Steel Zinc plating"-"slot type

ELECTRICAL
1.Current Rating : 57A
2.Voltage Rating : 300V
3.Wire range:
4.Solid wire(AWG):8-22
5.Stranded wire(AWG):8-22
6.Torque(Lb-In):19
7.Screw:M4.5
8.Wire strip length:10-11mm
9.Withstanding Voltage:1.6KV

ENVIRONMENTAL
1.Soldering Temperature: 250°C ±10°C/5 Sec
2.Operating Temperature: -40°C to +115°C
3.Safety approval: c us

Poles	02	03	04	05	06	07	08	09	10	11	12
Dim L	20.32	30.48	40.64	50.80	60.96	71.12	81.28	91.44	101.60	111.76	121.92
Dim B	10.16	20.32	30.48	40.64	50.80	60.96	71.12	81.28	91.44	101.60	111.76
TOL	±0.15					±0.20					

RoHS compliant

Scale	1:1						Date	Name
TOLERANCE						Drawn	20.03.2007	Hellwig
X.	±0.50							
X.X	±0.30					Approved	19.03.2009	Hellwig
X.XX	±0.10							
DIM	TOL	②	Change dimension from 1,90 to 1,70 Change dimension 1,20 to 1,00 Modify Operating temperature	19.03.2009	Dean			
X.°	±1°							
X.X°	±X°	①	Drawn	20.03.2007	Hellwig			
Angle	TOL	Id.	Modification	Date	Name			

Customer-No.

ASSMANN WSW-No.
A-TB116-VPXX

Drawing-No.
ASS 2179 CO

rev02

Replace

Sheet

ASSMANN WSW components

SV1387