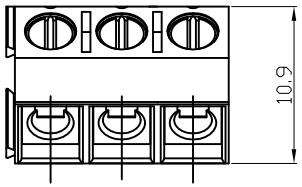

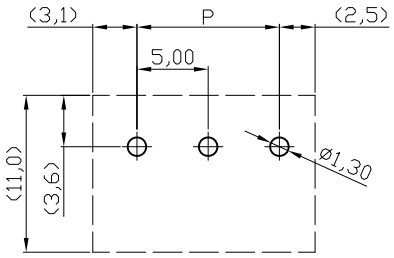

RECOMMENDED PCB LAYOUT

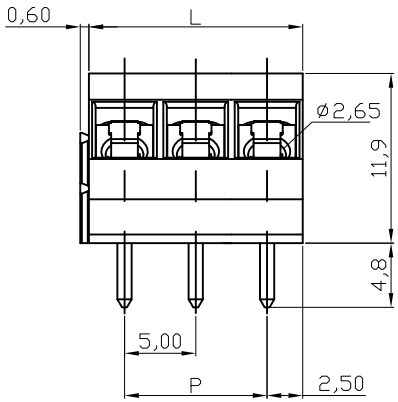

N=NUMBER OF CONTACTS

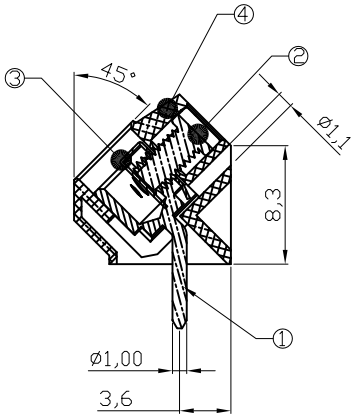

Material

Item ① Terminal body(metal housing): Brass(CuZn),Tin plated
Item ② Terminal screw: Steel Zinc plating "-" slot type
Item ③ Wire guard: Stainless steel
Item ④ Insulator (housing): Thermoplastic(UL94V-0),Black

Electrical

Voltage rating: 300VAC
Current rating: 15A
Wire range:
Solid wire(AWG): 14-22
Stranded wire(AWG): 14-22
Torque(Lb-In): 3.5
Screw: M2.6
Wire strip length: 6-7mm
Withstanding Voltage: 1.6KV
Operating temperature: -40°C to +115°C
Soldering temperature: 250°C±10°C/5 Sec
Safety Approval: c us

N=Number of poles
L=Nx5.0
P=(N-1)x5.0

TOL

POLES	L	P
2p-6p	±0.20	±0.15
7p-12p	±0.25	±0.20
13p-18p	±0.30	±0.25
19p-24p	±0.40	±0.30

RoHS compliant

Scale	1:1						Date	Name
TOLERANCE						Drawn	14.09.2007	Dean
X.	±0.50							
X.X	±0.30					Approved	20.04.2010	Hellwig
X.XX	±0.10							
DIM	TOL	②	Update	20.04.2010	Dean			
X.°	±1°	①	Drawn	14.09.2007	Hellwig			
Angle	TOL	Id.	Modification	Date	Name			

Customer-No.

ASSMANN WSW-No.
A-TB500-VYxx

Drawing-No.
ASS 2336 CO

rev02

Replace

Sheet

ASSMANN WSW components

SV523