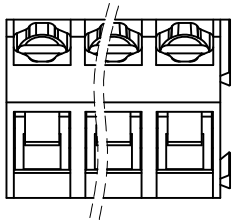

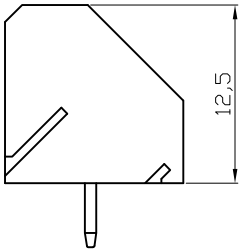

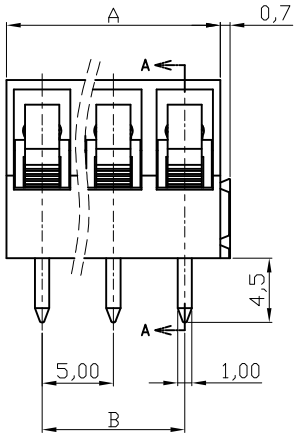

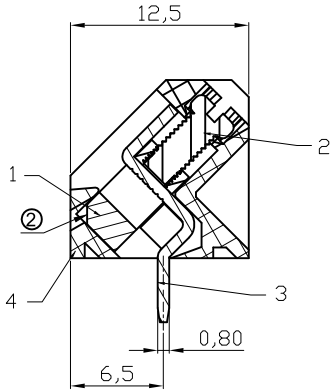

Material
- Item 1 Clamp:Brass,Ni plated
- Item 2 Terminal screw: Steel Zinc plating "-" slot type
- Item 3 Wire guard solder pin: Brass,Tin plated
- Item 4 Insulator (housing): Thermoplastic(UL94V-0),Blue

Electrical UL / VDE
- Voltage rating: 300V/250V
- Current rating: 15A/10A
- Wire range: 0.34-4.0mm²
- Solid wire(AWG): 12-24
- Stranded wire(AWG): 12-24
- Torque(Lb-In): 3.5 Lb-In / 0.4 N.m
- Screw: M2.5
- Wire strip length: 6-7mm
- Withstanding Voltage: 1.6KV/2KV
- Operating temperature: -40°C to +115°C
- Soldering temperature: 250°C±10°C/5 Sec
- Safety Approval: us

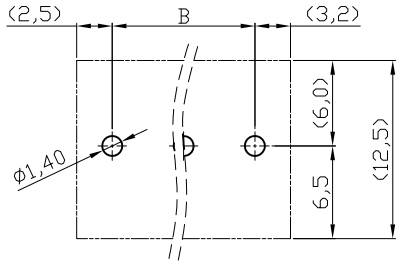

RECOMMENDED PCB LAYOUT

N=Number of poles
A=Nx5.0
B=(N-1)x5.0

TOL

POLES	A	B
2p-6p	±0.15	±0.15
7p-12p	±0.20	±0.20
13p-18p	±0.30	±0.30
19p-24p	±0.40	±0.40

RoHS compliant

Scale	1:1
TOLERANCE	
X.	±0.50
X.X	±0.30
X.XX	±0.10
DIM	TOL
X.°	±1°
Angle	TOL

Id.	Modification	Date	Name
②	Update	21.04.2010	Dean
①	Drawn	25.10.2007	Hellwig

	Date	Name
Drawn	25.10.2007	Hellwig
Approved	21.04.2010	Hellwig

ASSMANN WSW components

Customer-No.

ASSMANN WSW-No.
A-TB500-TGxx

Drawing-No.
ASS 2375 CO

rev02

Replace

Sheet

SV606