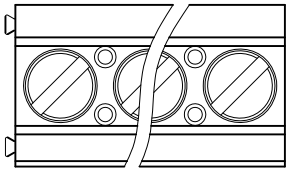

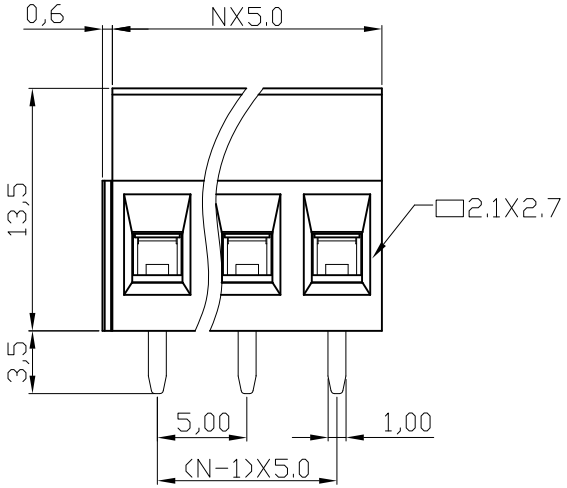

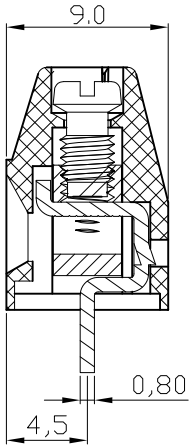

N=Number of contacts

Material
1.Terminal body
(metal housing): Brass(CuZn)
2.Terminal screw:Steel Zinc plating"-"slot type
3.Contacts: Brass
4.Surface of solder tail:Tin plated
5.Insulator (housing): Thermoplastic (UL94V-0),Green

Electrical	cULus/	FIMKO
1.Voltage rating:	300VAC/300VAC	
2.Current rating:	16A	/17.5A
3.Wire range:	0.5-1.5mm	
4.Solid wire(AWG):	12-28	
5.Stranded wire(AWG):	12-28	
6.Torque:	3.5 Lb-In/ 0.4N.m	
7.Screw:M3		
8.Wire strip length:	6-7mm	
9.Withstanding Voltage:	1.6KV / 2.5KV	
10.Operating temperature:	-30°C to +105°C	
11.Soldering temperature:	250°C±10°C/5 Sec	
12.Safety Approval:	c us	

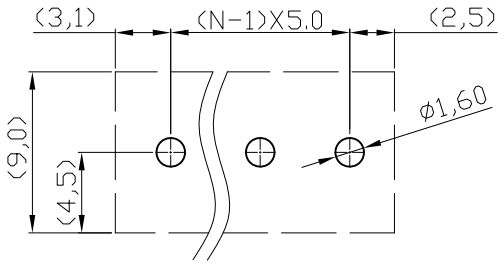

P.C.B LAYOUT

RoHS compliant

Scale	1:1						Date	Name
TOLERANCE						Drawn	27.05.2009	Dean
X.	±0.50					Approved	27.05.2009	Hellwig
X.X	±0.30							
X.XX	±0.10							
DIM	TOL							
X.°	±1°							
X.X°	±X°	①	Drawn	27.05.2009	Dean			
Angle	TOL	Id.	Modification	Date	Name			

Customer-No.

ASSMANN WSW-No.
A-TB500-VIxxH

Drawing-No.
ASS 3525 CO

rev01

Replace

Sheet

ASSMANN WSW components

SV1501