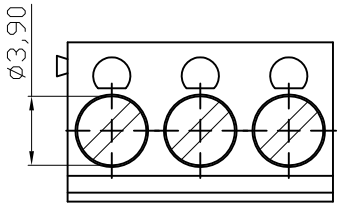

P.C.B LAYOUT

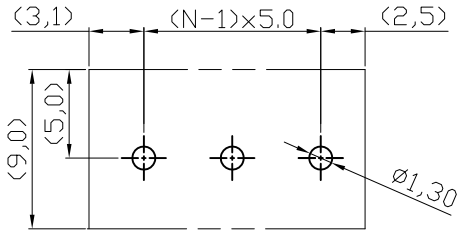

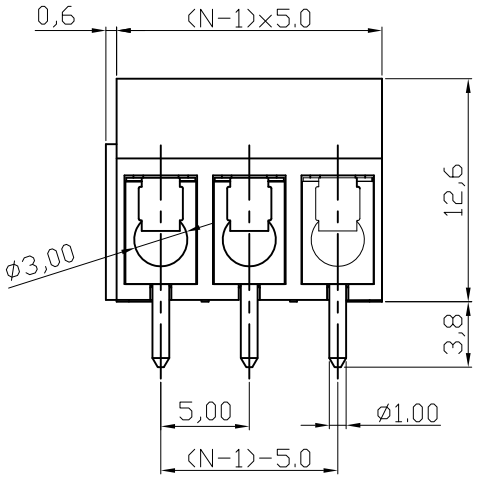

N=NUMBER OF CONTACTS

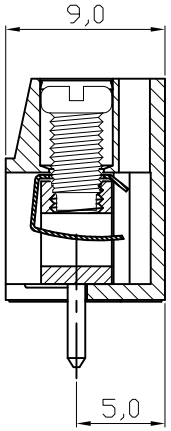

Material

Terminal body
(metal housing): Brass(CuZn) c
Terminal screw: Steel Zinc plating "-" slot type
Wire guard: Stainless steel
Surface of solder tail: Tin plated
Insulator (housing): Thermoplastic (UL94V-0) , Blue

Electrical UL/CSA/VDE

Voltage rating: 250VAC/250VAC/250VAC
Current rating: 16A
Wire range:1.0-2.5mm²
Solid wire(AWG): 14-26/14-22
Stranded wire(AWG): 14-26/14-22
Torque: 2.6Lb-In/4Kgf.cm/0.6Nm
Screw: M3
Wire strip length: 6-7mm
Withstanding Voltage: 1.5KV/1.5KV/2KV
Operating temperature: -40°C to +115°C
Soldering temperature: 250°C±10°C/5 Sec
SAFETY APPROVAL:

RoHS compliant

Scale	1:1						Date	Name
TOLERANCE						Drawn	29.07.2009	Dean
X.	±0.50					Approved	29.07.2009	Hellwig
X.X	±0.30							
X.XX	±0.10							
DIM	TOL							
X.°	±1°							
		①	Drawn	29.07.2009	Dean			
Angle	TOL	Id.	Modification	Date	Name			

Customer-No.

ASSMANN WSW-No.
A-TB500-TAxx

Drawing-No.
ASS 3589 CO

rev01

Replace

Sheet

ASSMANN WSW components

SVxxxx