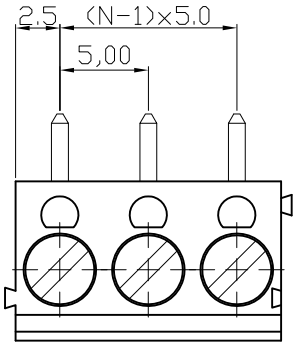

N= NUMBER OF CONCATS

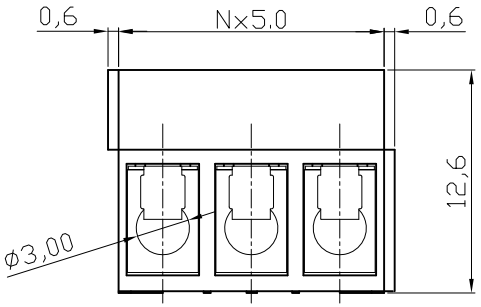

P.C.B LAYOUT

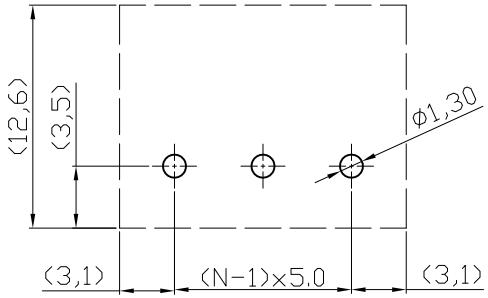

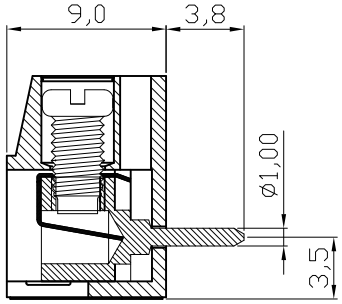

Material
1.Terminal body
(metal housing): Brass(CuZn)
2.Terminal screw:Steel Zinc plating"-"slot type
3.Wire guard:Stainless steel
4.Surface of solder tail:Tin plated
5.Insulator (housing): Thermoplastic (UL94V-0),Blue

Electrical UL/CSA
1.Voltage rating: 250VAC/250VAC
2.Current rating: 16A/16A
3.Wire range:
4.Solid wire(AWG): 14/14-22
5.Stranded wire(AWG): 14-22
6.Torque: 2.6Lb-In/4Kgf.cm
7.Screw:M3
8.Wire strip length:6-7mm
9.Withstanding Voltage: 1.5KV/1.5KV
10.Operating temperature: -40°C to +115°C
11.Soldering temperature: 250°C±10°C/5 Sec
12.Safety Approval:

RoHS compliant

Scale	1:1						Date	Name
TOLERANCE						Drawn	29.07.2009	Dean
X.	±0.50					Approved	29.07.2009	Hellwig
X.X	±0.30							
X.XX	±0.10							
DIM	TOL							
X.°	±1°							
X.X°	±X°	①	Drawn	29.07.2009	Dean			
Angle	TOL	Id.	Modification	Date	Name			

Customer-No.

ASSMANN WSW-No.
A-TB500-TBxx

Drawing-No.
ASS 3590 CO

rev01

Replace

Sheet

ASSMANN WSW components

SVxxxx