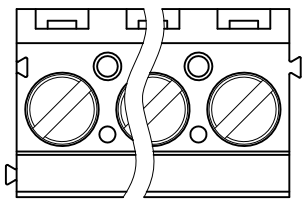

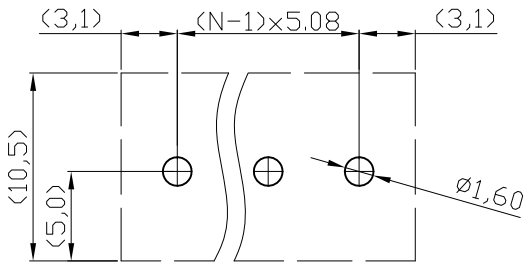

P.C.B LAYOUT

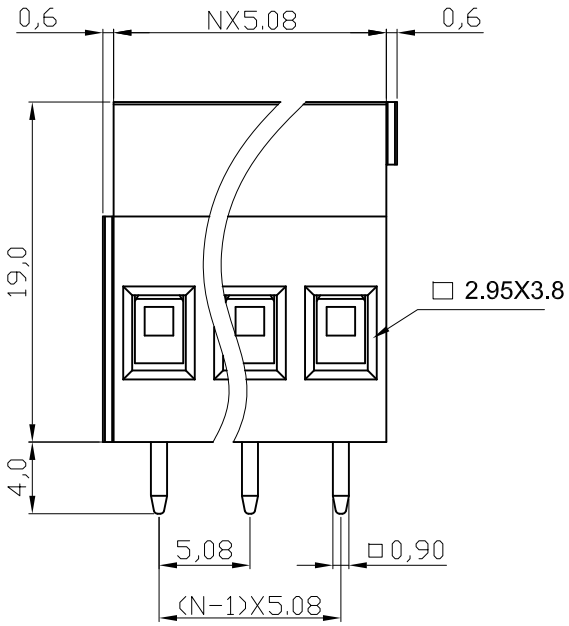

N=Number of contacts

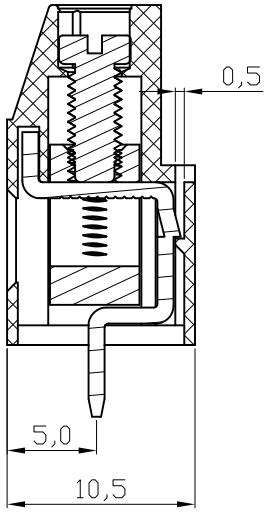

Material

Terminal body
(metal housing): Brass(CuZn)
Terminal screw: Steel Zinc plating "-" slot type
Contacts: Brass
Surface of solder tail: Tin plated
Insulator (housing): Thermoplastic (UL94V-0),Green

Electrical

Voltage rating: 300VAC
Current rating: 20A
Solid wire(AWG): 12-30
Stranded wire(AWG): 12-30
Torque(Lb-In): 3.5
Screw: M3
Wire strip length: 6-7mm
Withstanding Voltage: 1.6KV
Operating temperature: -40°C to +115°C
Soldering temperature: 250°C±10°C/5 Sec
Safety Approval: c us

RoHS compliant

Scale	1:1						Date	Name
TOLERANCE						Drawn	29.07.2009	Dean
X.	±0.50					Approved	29.07.2009	Hellwig
X.X	±0.30							
X.XX	±0.10							
DIM	TOL							
X.°	±1°							
X.X°	±X°	①	Drawn	29.07.2009	Dean			
Angle	TOL	Id.	Modification	Date	Name			

Customer-No.

ASSMANN WSW-No.
A-TB508-VJxxH

Drawing-No.
ASS 3595 CO

rev01

Replace

Sheet

ASSMANN WSW components

SVXXXX