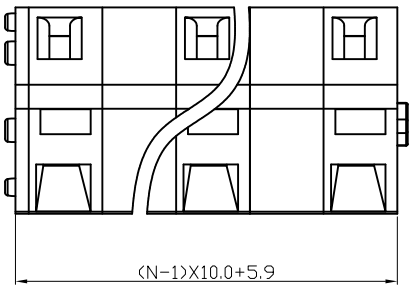


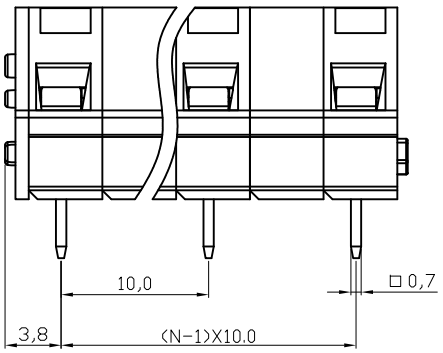


N=Number of contacts

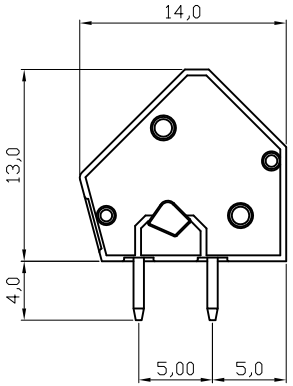


Material
- Terminal body (Contact pin): Brass
- Wire guard: Stainless steel
- Surface of solder tail: Tin plated
- Insulator (housing): Thermoplastic (UL94V-0) Grey

Electrical
- Voltage rating: 300VAC
- Current rating: 15A
- Wire range:
- Solid wire(AWG): 12-28
- Stranded wire(AWG): 12-28
- Pull force:
- Screw:
- Wire strip length: 6-7mm
- Withstanding Voltage: 1.6KV
- Operating temperature: -40°C to +115°C
- Soldering temperature: 250°C±10°C/5 Sec
- Safety approval : c us

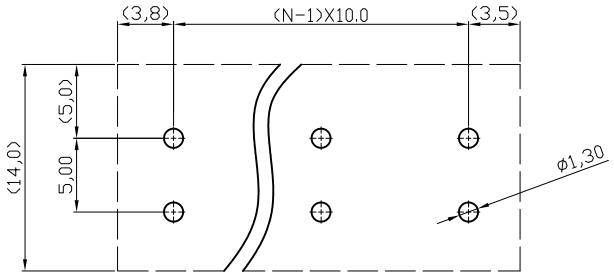


RECOMMENDED PCB. LAYOUT

**RoHS compliant**

| | | | | | | | | | |
|---|---|---|---|---|---|---|---|---|---|
| Scale | 1:1 | | | | | | Date | Name | Customer-No. |
| TOLERANCE | | | | | | Drawn | 05.05.2010 | Dean | |
| X. | ±0.50 | | | | | Approved | 05.05.2010 | Hellwig | ASSMANN WSW-No. A-TB100-HGxx |
| X.X | ±0.30 | | | | | | | | |
| X.XX | ±0.10 | | | | | | | | Drawing-No. ASS 3653A CO rev00 |
| DIM | TOL | | | | | | | | |
| X.° | ±1° | | | | | | | | |
| X.X° | ±X° | 0 | Drawn | 05.05.2010 | Dean | | | | Replace Sheet |
| Angle | TOL | Id. | Modification | Date | Name | | | | |

ASSMANN WSW components