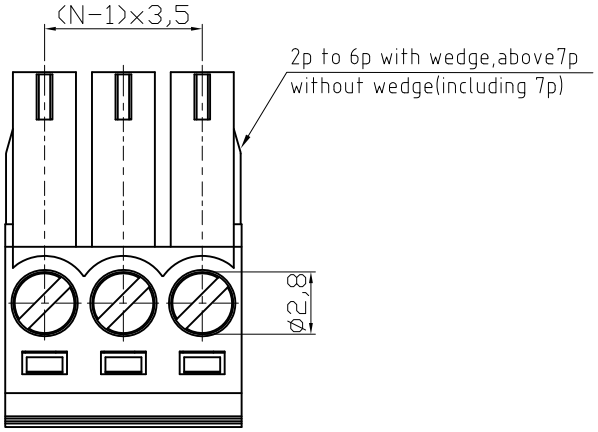

Material

Terminal body
(metal housing): Brass(CuZn)
Insulator (housing): Thermoplastic (UL94V-0),Green
Wire guard: PhBz, Tin plated
Terminal screw :Steel Zinc plating"-"slot type

Electrical cULus/ CSA /VDE
Voltage rating: 300VAC/125VAC/300VAC
Current rating: 10A/8A/10.5A
Wire range: 1.5mm²
Solid wire(AWG): 16-26/16-26
Stranded wire(AWG): 6-26/16-26
Torque: 3Lb-In / 3.5kgf.cm / 0.2N.m
Screw: M2
With strip length:6-7mm
Withstanding Voltage: 1.6KV/1.6KV/2.5KV
Operating temperature: -30°C to +105°C
Safety Approval:

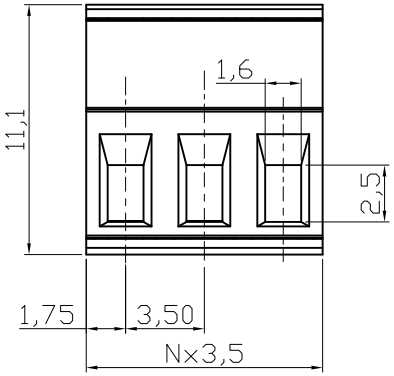

N= NUMBER OF CONTACTS

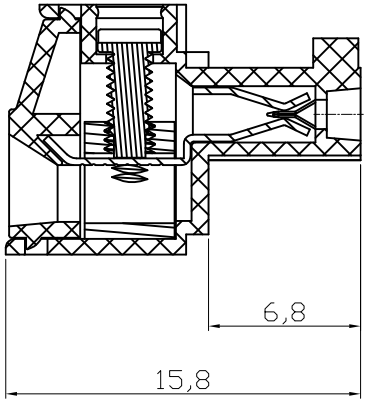

RoHS compliant

Scale	1:1						Date	Name	Customer-No.
TOLERANCE						Drawn	10.12.2009	Dean	
X.	±0.50					Approved	10.12.2009	Hellwig	ASSMANN WSW-No. A-TB350-TJxxU
X.X	±0.30								
X.XX	±0.10								Drawing-No. ASS 3822 CO rev01
DIM	TOL								
X.°	±1°								
		①	Drawn	10.12.2009	Dean				Replace Sheet
Angle	TOL	Id.	Modification	Date	Name				

ASSMANN WSW components