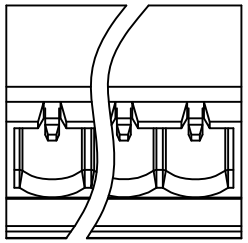

P.C.B LAYOUT

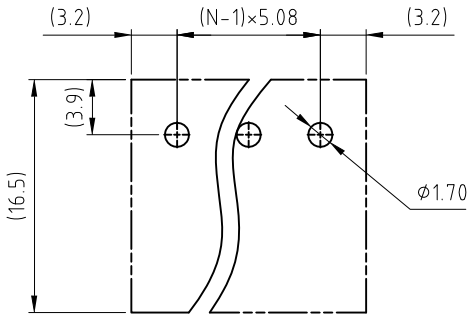

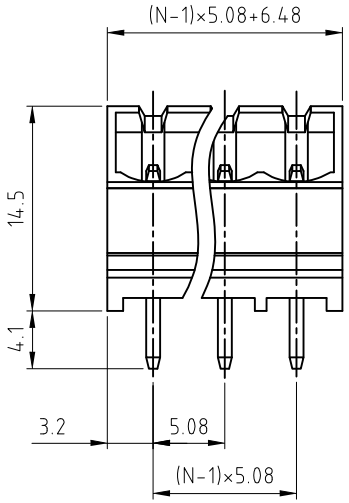

N=Number of contacts

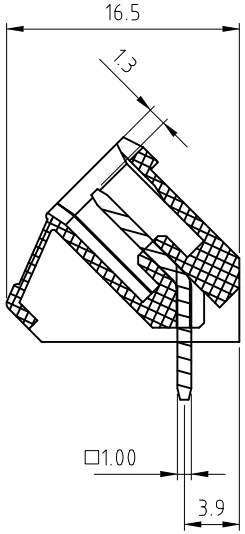

Material

- Contact pin: Brass
- Surface of solder tail: Tin plated
- Insulator (housing): Thermoplastic (UL94V-0) Green

Electrical cULus /VDE / TUV

- Voltage rating: 300V/300V/300V
- Current rating: 15A/17A/20A
- Wire range:
- Solid wire(AWG):
- Stranded wire(AWG):
- Wire strip length:
- Withstanding Voltage: 1.6KV/2.5KV/2.5KV
- Operating temperature: -30°C to +105°C
- Soldering temperature: 250°C±10°C/5 Sec
- Safety Approval:

RoHS compliant

Scale	1:1						Date	Name
TOLERANCE						Drawn	10.12.2009	Dean
X.	±0.50					Approved	10.12.2009	Hellwig
X.X	±0.30							
X.XX	±0.10							
DIM	TOL							
X.°	±1°							
		①	Drawn	10.12.2009	Dean			
Angle	TOL	Id.	Modification	Date	Name			

Customer-No.

ASSMANN WSW-No.
A-TB508-VKxx

Drawing-No.
ASS 3929 CO

rev01

Replace

Sheet

ASSMANN WSW components