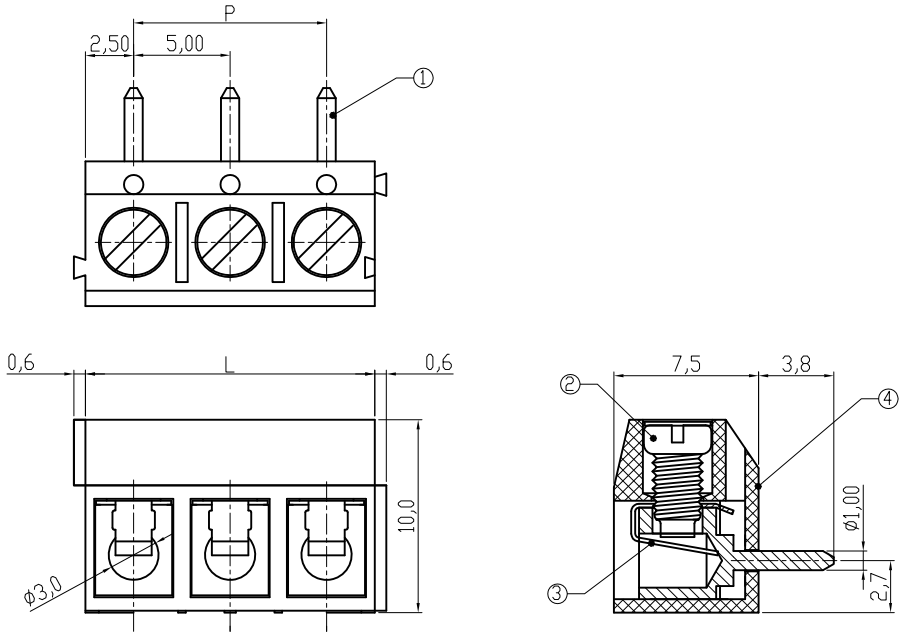

Material

①Terminal body(metal housing): Brass(CuZn),Tin plated
②Terminal screw: Steel Zinc plating "-" slot type
③Wire guard: Stainless steel
④Insulator (housing): Thermoplastic (UL94V-0) ,BLUE

Electrical cULus
Voltage rating: 250V
Current rating: 16A
Wire range:
Solid wire(AWG): 14-22
Stranded wire(AWG): 14-22
Torque(Lb-In): 2.6
Screw: M2.6
Wire strip length: 5-6mm
Withstanding Voltage: 1.5KV
Operating temperature: -40°C to +115°C
Soldering temperature: 250°C±10°C/5 Sec
Safety Approval:
c us

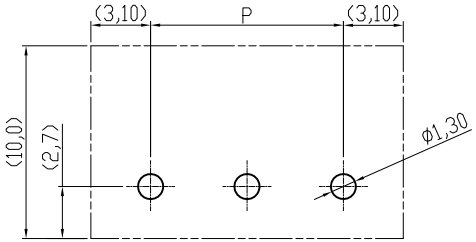

RECOMMENDER PCB LAYOUT

DIMENSION

L	Nx5,0
P	(N-1)x5,0

N=Number of poles

Poles	Tolerance	
	3,8mm	DIM L&DIM P
2p-6p	±0,15	±0,20
7p-12p	±0,20	±0,25
13p-18p	±0,25	±0,35
19p-24p	±0,30	±0,40

RoHS compliant

Scale	1:1
TOLERANCE	
X.	±0.50
X.X	±0.30
X.XX	±0.10
DIM	TOL
X.°	±1°
Angle	TOL

Id.	Modification	Date	Name
0	Drawn	19.04.2010	Alex

	Date	Name
Drawn	19.04.2010	Alex
Approved	19.04.2010	Hellwig

ASSMANN components

Customer-No.

ASSMANN WSW-No.
A-TB500-TDxx

Drawing-No.
ASS 4090 CO

rev00

Replace

Sheet