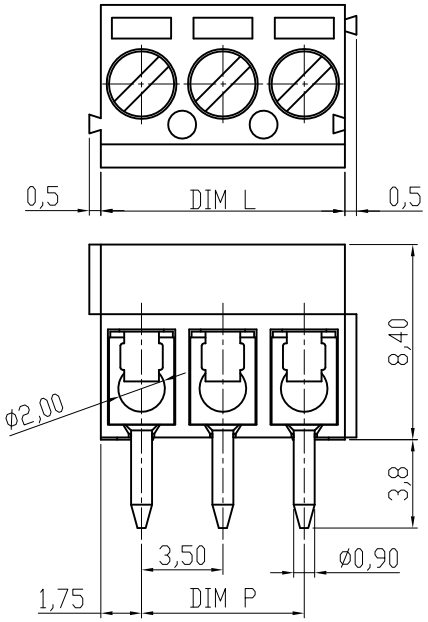

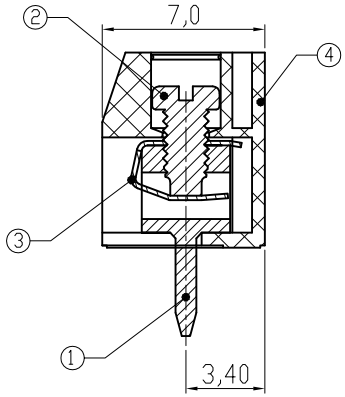

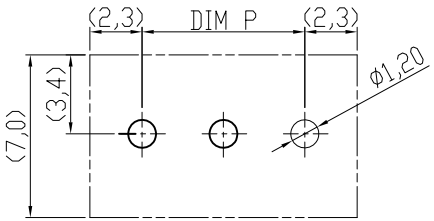

RECOMMENDER PCB LAYOUT

Material

①Terminal body(metal housing): Brass(CuZn),Tin plated
②Terminal screw: Steel Zinc plating "-" slot type
③Wire guard: Stainless steel
④Insulator (housing): Thermoplastic (UL94V-0) BLACK

Electrical UL

Voltage rating: 125V
Current rating: 10A
Wire range:
Solid wire(AWG): 16-26
Stranded wire(AWG): 16-26
Torque(Lb-In): 1.7Lb-In
Screw: M2
Wire strip length: 5-6mm
Withstanding Voltage: 1.25KV
Operating temperature: -40°C to +115°C
Soldering temperature: 250°C±10°C/5 Sec
Safety Approval:

DIMENSION

L	Nx3.5
P	(N-1)x3.5

N=Number of poles

Poles	Tolerance	
	DIM L	DIM P
2p-6p	±0.10	±0.10
7p-12p	±0.20	±0.15
13p-18p	±0.30	±0.25
19p-24p	±0.40	±0.35

RoHS compliant

Scale	1:1
TOLERANCE	
X.	±0.50
X.X	±0.30
X.XX	±0.10
DIM	TOL
X.°	±1°
Angle	TOL

Id.	Modification	Date	Name
0	Drawn	19.04.2010	Alex

	Date	Name
Drawn	19.04.2010	Alex
Approved	19.04.2010	Hellwig

ASSMANN WSW components

Customer-No.

ASSMANN WSW-No.
A-TB350-TExx

Drawing-No.
ASS 4091 CO

rev00

Replace

Sheet